D8/D16 XCEL 4G

8/16 Zone Control Panels with 4G Communicator

MADE IN AUSTRALIA

Navigator, Saturn+ or KPX+ keypad options

SIM

Ness SIM supplied for your convenience.

Activate the SIM on a competitive Ness SIM Plan or BYO SIM

activate.ness.com.au

- 8 or 16 Hardwired or Wireless zones
- Various Keypad Options
- 4G Cellular
- Operation by Smartphone / Internet
- Operation and Monitoring by SMS or Central Station
- Access Control onboard
- Powerful Wireless Options
- Auto-Time Automation
- Up to 8 AUX Outputs
- Easy Programming via Keypad
- Fast Programming via PC
- Free NessComms Installer Software
- Convenient Programming via SMS
- Adjustable Vibration Inputs on all Zones
- C-BUS Compatible using Ness MiniCentral
- Multiple Arming Modes
- Area Partitioning
- Dual Voltage 17VAC & 20VDC

Installation & Programming Manual	D8/D16 XCEL 4G	Document 890-490 Rev 1.14D

CORPORATION Innovative Electronic Solutions

www.ness.com.au

National Customer Service Centre
Ph: 1300 551 991
techsupport@ness.com.au

D8/D16 XCEL
INSTALLATION & PROGRAMMING MANUAL

Document Part No: 890-490
Rev 1.14D Aug 2024
For use with Ness D8XCEL/D16XCEL control panels with 4G Communicator V11.3 and later.

Related manuals:
890-497 D8/D16 XCEL 4G LCD Keypad User Manual
890-498 D8/D16 XCEL 4G Navigator Keypad User Manual

WARNINGS & NOTICES

Ness Corporation manufacturing processes are accredited to ISO9001 quality standards and all possible care and diligence has been applied during manufacture to ensure the reliable operation of this product. However there are various external factors that may impede or restrict the operation of this product in accordance with the product's specification.

These factors include, but are not limited to:

1. Erratic or reduced radio range (if radio accessories are installed). Ness radio products are sophisticated low power devices, however the presence of in-band radio signals, high power transmissions or interference caused by electrical appliances such as Mains Inverters, Wireless Routers, Cordless Phones, Computers, TVs and other electronic devices may reduce radio range performance. While such occurrences are unusual, they are possible. In this case it may be necessary to either increase the physical separation between the Ness receiver and other devices or if possible change the radio frequency or channel of the other devices.
2. Unauthorised tampering, physical damage, electrical interruptions such as mains failure, electrical spikes or lightning.
3. Solar power inverters are a known source of electrical interference. Please ensure that this product and all associated cabling is installed at least 3 metres away from a solar power inverter and its cabling.
4. While SMS reporting is a powerful and useful feature it is dependent on the integrity and availability of the cellular network.
   As with any SMS message it is possible that SMS monitoring reports may be delayed or fail to be delivered. Such failures are a function of the cellular network/s and beyond the control of Ness Corporation. Ness recommends central station monitoring using an IP protocol as your primary monitoring path.
5. Ness recommends IP Protocol for most reliable back-to-base reporting. Contact ID (CID) is available as an option and should only be used if your central station does not offer IP protocols.

WARNING: Installation and maintenance to be performed only by qualified service personnel.

CAUTION: Risk of explosion if battery is replaced by an incorrect type. Dispose of used batteries in accordance with local regulations.

All rights reserved. No part of this publication may be reproduced, transmitted or stored in a retrieval system in any form or by any means, electronic, mechanical, photocopying, recording, or otherwise, without the prior written permission of Ness.

Ness reserves the right to make changes to features and specifications at any time without prior notification in the interest of ongoing product development and improvement.

© 2024 Ness Corporation Pty Ltd ABN 28 069 984 372

XCEL 4G QUICK START

Installers, you will be pleased to know that XCEL 4G differs from XCEL 3G in only three program options, mostly to cater for the new IP reporting feature.

New option **P86E 3E**: Enable Reporting by ARMOR IP, see Page 52

New option **P85E** Polling Interval, see page 51

Changed options **P170E, P171E,** Central Station Reporting Numbers (see page 47) can be programmed as:

- Base Station Phone Number for Contact ID reporting > programmed via Keypad or SMS
- IP Address for ARMOR IP reporting > programmed via Keypad or SMS
- Domain Name for ARMOR IP reporting > programmed via SMS

CONTENTS

Product Features 4
SIM activation, SIM information 4
Optional products and software 5
Installation procedures 6
Inputs and outputs 7

Connection Diagrams 8–9
Keypad Operation - Saturn & KPX+ 10–11
Keypad Operation - Navigator 12
Operation
Operation Summary - Keypads, SMS, Radio Keys 13
Operation by SMS, Detail 14

PROGRAMMING
How to enter Program Mode 15
Special Functions in Program Mode 15
Quick start Programming 16
Programming by SMS 17
Central Station Monitoring, operation 18
Contact ID Reports Table 18

SMS Messaging
SMS Monitoring, operation 19
SMS Request Status 20
SMS Text Output 21–22

PROGRAMMING OPTIONS
User Codes 23–24
Timers 25
Vibration Sensitivity 26
Zone Assignment 27–28
Definitions. Day Zones, Temp Day Zones, Home 29
Zone To Output Mapping 30–32
Various Options 33–34
Tamper/Keypad Panic Output Mapping 35
System Operation Shortcuts 36
Home Mode, Day Mode output mapping 37
Miscellaneous Options 38
Zone Supervision options 39–41
Misc. options 42–45

COMMUNICATOR OPTIONS
Central Station Monitoring Account Numbers 46
Central Station Reporting Numbers 47
SMS Monitoring Phone Numbers 48
Report zone alarms 49
Report zone restorals 49
Report multiple zone alarms 49
Account No.2 zones 49
Report Miscellaneous alarms 50
Report Miscellaneous Restorals 50
Test Call options 51
Reporting format options 52–53
Enable SMS Reporting 53
Area1, Area2 open/close reports 54
Siren Chirp, Flash options 54
Other reports 55
Enable Test Calls 56
Mains Report Delay/ Swinger Shutdown 56
No Memory Warning zones 57

FACTORY DEFAULTS
Clear Radio Devices 58
Clear Memory 58
Clear Panel Options 58
Clear User Codes 58

Program the Installer Code 58

Output Expander options 59–60

AUX OUTPUTS
Aux1~4 output options 63–70
Aux5–8 output options 71

Alarm/Fire/Chirp Siren Volume 72
Enable/Disable hardwire zones 72
End Of Line Resistor options 73

AUTOTIME OPTIONS
AutoTime description and examples 74
RealTime Clock programming 75
AutoTime programming 75–76

RADIO OPTIONS
Signal Strength Test 77
Ness Radio Interface, connection 77
Radio Device / RADIO KEY Programming 78–79

Serial Output options 80

ACCESS CONTROL OPTIONS
Programming access cards 81
Access Control options 82–85
Weigand Reader wiring diagram 86

Programming Options Summary 87–92
Specifications 93
Release Notes 94
Installation Record 95

SIM

NESS SIM Registration & Activation

THIS CELLULAR PRODUCT IS NOT LOCKED AND CAN BE USED WITH ANY ACTIVE SIM.[1]

A Ness SIM card is supplied for your convenience. You can choose to activate the Ness SIM or BYO SIM on a network of your choice.

Please activate the Ness SIM to enjoy the advantages of remote access and monitoring via the cellular network.[2]

Ness SIM benefits:

- A Ness SIM card is supplied
- Easy online activation & simple billing
- Competitive Retail & Trade SIM plans
- No lock-in contracts - opt out anytime

To activate the SIM

activate.ness.com.au

1. Standard sized SIM required.
2. Monthly network access charges apply once activated. Access charges do not include central station monitoring which is a separate service.

SIM enquiries: simactivation@ness.com.au

What's New in D8XCEL / D16XCEL 4G

- 4G Cellular Communicator onboard
- Supports Ness-Bridge internet interface & Ness Mezzo app
- Operation via SMS messaging
- Programming via SMS
- Alarm reports via SMS self-monitoring or Central Station
- Central Station monitoring in Contact ID and ARMOR IP formats
- The panel is not network locked. Activate the supplied Ness SIM or BYO SIM
- New PCB layout, AUX5~8 header added

Features

- 8 or 16 alarm zones.
- Supports up to 3 mixed keypads (Navigator/Saturn/LCD) or 4 Navigator keypads
- 56 user codes can be programmed to operate by keypad PIN, radio key or access card.
- Optional NESS RADIO INTERFACE for fully integrated wireless security.
- Programmable TWO AREA PARTITIONING can split the panel into two independent areas plus a common area.
- REAL TIME CLOCK with AUTOTIME features - auto arm/disarm, auto aux outputs, time based user control.
- 3 Door ACCESS CONTROLLER onboard with support for Weigand prox or fingerprint readers.
- Supports control via INTERNET using Ness MEZZO free app and optional 106-014 Ness-Bridge ethernet adapter.
- Home Mode allows partial arming, (eg, perimeter security overnight).
- Day Mode feature allows daytime monitoring of fire doors, coolrooms etc.
- Temporary Day Zone feature allows easy enabling/disabling of Day Mode.
- Keypad Panic and Duress feature.
- Two button arming feature.
- Fire Alarm feature with different siren tones.
- Highly flexible zone to output mapping.
- ONBOARD VIBRATION SENSOR ANALYSER with programmable sensitivity. Use with Nessensor™ vibration sensors.
- MULTIPLE PROGRAMMABLE EOL resistor values from 0k to 22k (2k2 resistors supplied).
- Siren chirp and strobe flash on arming with radio key.
- Quiet chirps option on arm/disarm by radio key.
- True DYNAMIC BATTERY TEST actively tests the battery under load every hour and every time a keypad code is entered.
- 4 PROGRAMMABLE AUXILIARY outputs (Up to 8 Aux outputs optional).
- Optional output expander.
- ENHANCED SERIAL DATA input/output via RS232.
- AUTOMATIC RESET FUSES.
- Programmable Reset Output lockout.
- 30 event memory from KPX and Saturn keypads. 80 event memory can be accessed using Navigator keypad or NessComms™.
- Standard defaults to suit most applications.
- Easy programming by keypad or NessComms™ software by direct connect.
- All programming data is permanently stored in a non-volatile memory.
- All inputs and outputs are heavily protected against lightning and high voltage supply transients.
- High efficiency DC power supply with dual 17VAC/20VDC power input

Communicator

- 4G Communicator onboard
- Direct-connect upload/download using NessComms™ software.
- View system status and arm/disarm using NessComms™.
- Remote control of outputs via telephone with voice prompts.
- Operation via SMS messaging
- Programming via SMS
- Alarm reports via SMS self-monitoring or Central Station
- Central Station monitoring in Contact and ARMOR IP formats
- Remote operation and programming via the free NessXCEL SMS app

OPTIONAL ACCESSORY

NESS-BRIDGE

Ethernet Interface Module

Part No. 106-014

Ness-Bridge ethernet interface provides internet connectivity for Ness D8/D16 control panels.

Ness-Bridge is an easy installation in Ness D8/D16 housings.

Includes red slider mounting rails & 4-wire loom.

Use with Ness Mezzo app.

Further information: Ness Bridge web page

FREE APP

NESS MEZZO APP

Free app for iOS & Android

Ness-Bridge in combination with the free Ness Mezzo app provides handy remote operation features for your Ness control panels.

- Arm and Disarm
- Home Mode operation
- Operate D8/D16 outputs
- Receive Push Notifications for Arm/Disarm/Alarm events
- View zones and panel status

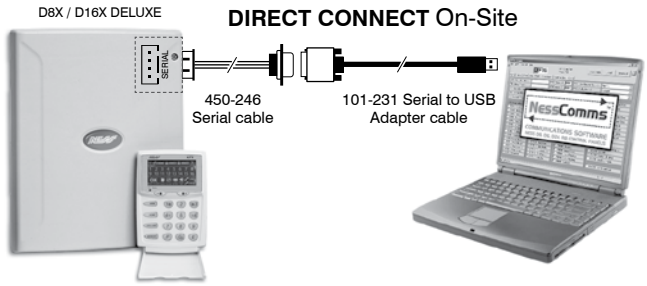

Note:
D8x/D16x and XCEL models (v8 and later) use 450-246 serial cable (4 pin)
Previous versions of D8x/D16x use 450-185 RS232 cable (3 pin)

FREE SOFTWARE

NESSCOMMS

Powerful PC-based programming & operation software

- Fast and easy installation programming
- Live zone status mode
- Download system logs, including extended logs not accessible by keypad - up to 80 events
- Database stores hundreds of clients
- Free For Trade users

NessComms makes on-site control panel programming as simple as ticking the boxes.

Direct connect via serial port for fast and easy programming by laptop/PC. The Ness 450-246 Serial Cable and 101-231 Serial-to-USB adpater cables are required.

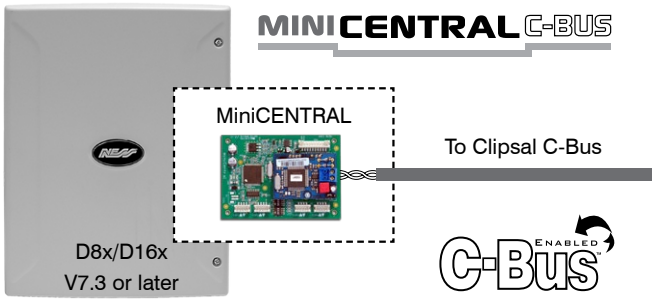

OPTIONAL PRODUCT

MINICENTRAL

Ness MiniCENTRAL C-Bus interface combined with a Ness D8x/D16x control panel gives you full two-way C-Bus control and all the features and benefits of a powerful alarm panel.

- Fully Clipsal approved C-Bus Enabled Product.
- Controls up to 255 individual C-Bus lights or outputs. Includes full dimming, On/Off and toggle commands.
- True 2 way communications on the C-Bus network.
- Connects directly onto C-Bus without the need for additional hardware such as a PCI Interface.
- Many D16X events or status changes can control modules on the C-Bus.
- C-Bus Trigger Control and Enable Control.
- C-Bus events can control the D8x/D16x.
- Multiple onboard SERIAL repeater ports means the D8x/D16x panel can also connect to other serial devices while connected to MiniCENTRAL.

ESD WARNING

(Electrostatic Discharge).

Once properly installed, Ness control panels are well protected from ESD. However, take note of the following precautions during installation.

The human body can generate static electricity when it is insulated from earth - for instance by walking over carpet.

ESD occurs (and a small shock is sometimes felt) if an earthed metal object is then touched.

The installer should be aware that if he generates static electricity while installing the panel and then discharges this static electricity into the internal components on the main D8/D16 circuit board or the keypad board, then ESD damage may occur.

The circuit board should not be unwrapped until it is actually ready to be installed.

Methods to avoid electrostatic build-up.

1. Use a foot strap, a wrist strap, or a grounding mat. The aim is to connect the body to earth to discharge static before it builds up. The connection is a high resistance for personnel safety.
2. If the above is not available, then it is advisable to wear clothing that will minimise the build-up of static.
3. Handle circuit boards by the edges. Avoid touching any components on the board as the integrated circuits, in particular, are not guaranteed by their manufacturers to be safe from ESD.
4. To minimise the build-up of static, avoid walking around as much as possible while working on the installation.
5. Touch an earthed object to discharge any static before working on the installation.

INSTALLATION PROCEDURES

The main panel housing and keypad/s should be installed within areas that are protected by motion sensors or reed switches. A linen closet or cupboard are good examples as these are generally located in the centre of the premises. Installing in ceiling spaces or other areas where extremes of temperature may be encountered is not advised.

Positioning of the movement detectors should be considered as the incorrect position may cause unwanted alarms. Refer to the motion sensors' installation instructions.

1. Remove the lid and the battery from the base.
2. Securely mount the rear panel housing in a secure location.
3. Run all cabling needed for the installation.
4. Insert the red PCB stand-offs in the housing and then plug the circuit board onto the stand-offs. See the ESD Warning on this page.
5. Wire the sensors, sirens and accessories to the main board terminal blocks as per the wiring instructions in this installation manual.
6. Connect the 4G antenna connector on the PCB and install the antenna outside the panel housing in a location providing the best signal strength as indicated by the keypad signal strength display.
7. Fit the battery into the housing but DO NOT CONNECT the battery yet.
8. Insert the panel tamper bracket leads as shown below.
9. The NESS SIM is factory-fitted or insert your own SIM card as shown.
10. Power up as described below.
11. Close the lid and program the panel as required.

POWER-UP PROCEDURE

To enter INSTALLER PROGRAM MODE the first time, power-up with the PROG/TAMP link OFF. If the PROG/TAMP link is ON and any other 24hr zones are unsealed on power-up the panel will immediately go into alarm - reset the alarm via keypad or remove power to stop the alarm.

1. CONNECT THE BATTERY FIRST. Observe correct polarity.

a) The RED heartbeat LED will flash continuously to indicate correct operation.

b) The Current Limiting Globes should be OFF. If the Globes are glowing, the battery connection is reversed. Immediately disconnect the battery and check the polarity of the battery leads.

If the heartbeat LED does not flash steadily or cycles off intermittently there may be a problem with the initialisation of the onboard memory. **To remedy, in Installer Program Mode press P95E, P97E & P98E to erase all programming and reload factory defaults**. Then remove power by briefly removing one of the battery leads then re-connect. The heartbeat LED should now be flashing continuously, proceed to power-up step 2.

2. TURN ON THE EXTERNAL POWER SUPPLY. The Current Limiting Globes may glow slightly to indicate that the battery is charging correctly.

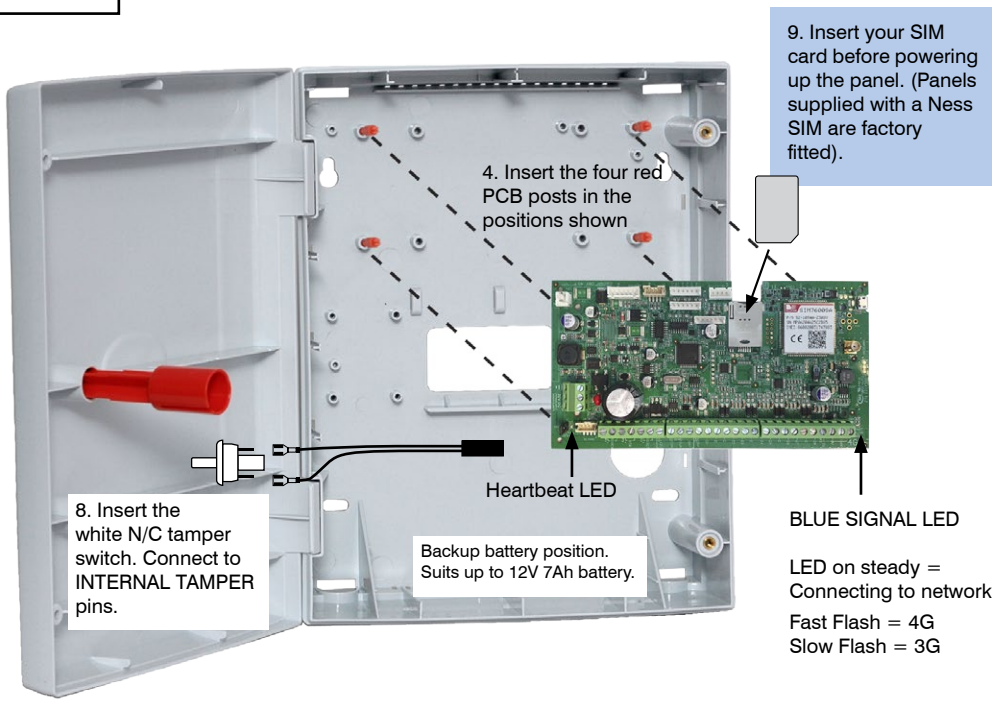

INPUTS

MONITORED ZONES

The Ness D8x and D16x have 8 or 16 fully programmable zone inputs. (Monitored by end of line resistor).
Also, 1 x 24 hour External TAMP input. (Monitored by end of line resistor). 1 x 24 hour Box Tamper input. (Normally Closed input. Resistor is not required).

END OF LINE RESISTOR

Each zone input must be terminated with an end of line (EOL) resistor unless the zone is disabled by option P125E.

The default EOL resistor value is 2.2k (2200 Ohms). The EOL value is fully programmable. Available options are 0k (closed circuit), 1k, 1.5k, 2.2k, 3.3k, 3.9k, 4.7k, 5.6k, 6.8k, 8.2k, 10k, 12k and 22k. See programming option P129E.

TAMP – TAMPER INPUT

The TAMP input must also be sealed with an end of line resistor. This input is always a 24hr input. The EOL value programed by option p129E also applies to the TAMP input.

POWER INPUT TERMINALS

These terminals are for the connection of the external power supply. Your panel has a dual 17VAC/20VDC power input. Please use the correct power supply as shown on page 8.

EARTH (Functional Earth, not a safety Earth)

Connect a good earth to this terminal to help protect against damage from lightning strikes and static.

BATTERY

These terminals are for the connection of a sealed lead-acid rechargeable 12Volt battery. Charge current is limited to 350mA. The charge voltage is factory preset at 13.8V. Note: A 12 Volt sealed lead acid rechargeable battery must be connected for correct panel operation and to ensure the Siren, Strobe and Reset outputs operate correctly.

The panel will shut down if battery voltage is below 11V and mains power is off.

Observe correct polarity when connecting the battery.

(Ness Part Number BAT210 12V 7Ah battery)

CURRENT LIMITING

The current limiting globes serve to regulate battery charging current. When the battery is fully charged the globes will not glow. The globes will glow slightly when recharging the battery after a short power outage. If the globes glow very brightly the battery is drawing excessive current and may be faulty, or the battery is connected in reverse. Check the connections or connect a charged battery.

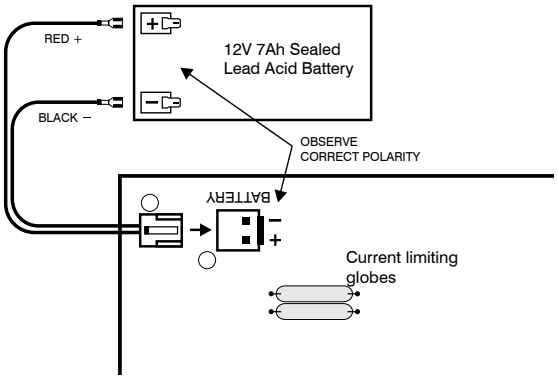

OUTPUT FUSING. The 12V outputs, Siren, Reset and Strobe outputs are protected by Automatic Reset electronic fuses. These outputs will automatically reset once the overload is removed.

OUTPUTS

12 VOLT OUTPUT

A regulated 13.8 VDC output is available to power detectors and other equipment. This output is available from two sets of terminals marked +12V and 0V. This output is protected by an Automatic Reset fuse.

A maximum load of 500mA may be connected to these terminals.

SIREN

The on-board siren driver will drive a maximum of 3 x 8 ohm horn speakers (Ness Part No. NOI110 or 100-171 Internal Siren). The output will reset at the end of siren time (P29E) or whenever the panel is reset, whichever comes first.

This output is protected by an Automatic Reset fuse.

STR

A latched 12VDC output for connecting strobe lights.

This output will reset after 72 hours (3 days) or when the panel is disarmed. (D8/D16 versions prior to V4.5 allow indefinite strobe operation, until the panel is reset).

A maximum of 2 x 1 Watt Strobes (Ness Part No. NOI300) can be connected to this output.

This output is protected by an Automatic Reset fuse.

RESET

A 12V DC output for connecting Ness sirens, piezo sirens or relays, etc. This output will reset at the end of siren time (P29E) or whenever the panel is reset, whichever comes first.

A maximum of 3 x 12V piezo screamers (Ness Part No. 100-238, 100-004) or 2 X Ness Piezo (Part No 100-172) can be connected to this output.

This output is protected by an Automatic Reset fuse.

AUX HEADERS (AUX1~4, AUX5~8)

The Aux1 to Aux8 outputs are open collector outputs (switch negative) which can supply a maximum of 100mA. Each Aux output can be programmed to perform several different functions.

The headers also provides a 12V DC output, max. draw 100mA.

RS232 SERIAL PORT (4 PIN)

Two way RS232 serial port for interfacing to a PC or external automation products. The serial data is 9600 baud, 8 data bits, no parity, 1 stop bit. Developer's kit available on request.

PROG/TAMP – PROGRAM LINK & INTERNAL TAMPER INPUT

The PROG/TAMP link appears on the two pin J1 header.

The PROG/TAMP link has two purposes:

1. **To enter Installer Program Mode on initial power up**. Power-up with the PROG link OFF. The PROG link (or Box Tamper lead) must be ON in operating mode.

2. **Box Tamper.** When used with the Internal Tamper Lead (supplied), PROG/TAMP serves as the 24hr tamper input for the panel's internal tamper switch.

Replace the PROG Link with the Box Tamper Lead. Connect the Internal Tamper Lead spade terminals directly to the terminals of the internal tamper switch (supplied). An end-of-line resistor is NOT required on this input.

When PROG/TAMP is used for Internal Tamper, powering up with the panel's cover open will enter Installer Program Mode.

SIREN LOAD. A maximum output of 2.0A continuous is available from the SIREN and RESET outputs and 200mA from the STR output.

Recommended maximum power load:
3 x Horn speakers (SIREN output)
2 x Strobe lights (STR output)
2 x Ness Internal Sirens (100-172) (RESET output)

Note: *(This assumes no more than 500mA is being drawn from the 12V device outputs).*

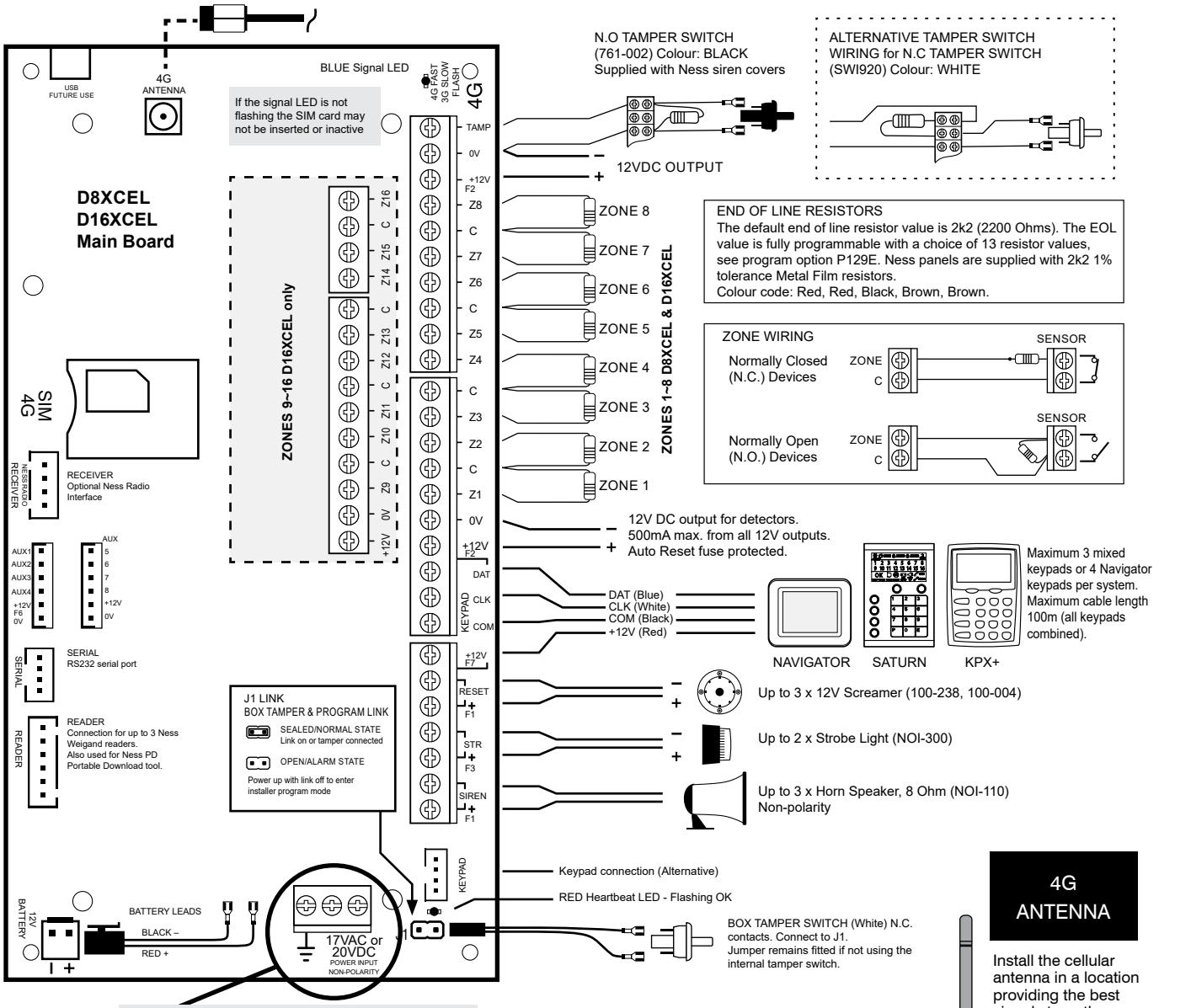

A 20VDC power supply is included with most D8XCEL/D16XCEL models (Australia only).

This power supply has positive and negative 20VDC output however the polarity is not important in this case.

Siren Wiring Examples

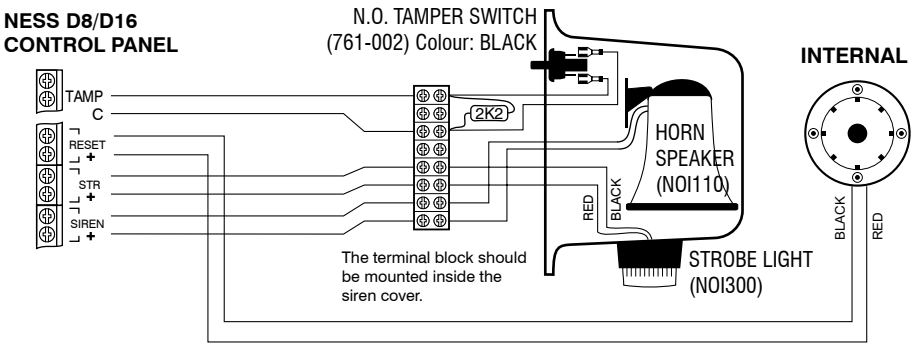

Optional Accessories for D8 & D16

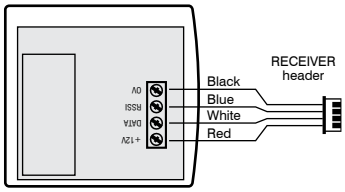

100-200
Ness Radio Interface
One Way radio interface.

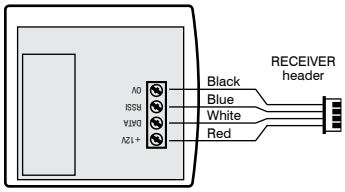

106-462
Ness X-TWR
Two Way radio interface.

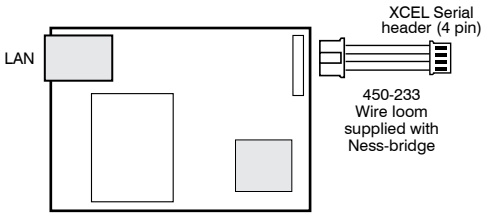

106-014
Ness-Bridge Ethernet Interface for use with Ness Mezzo app.

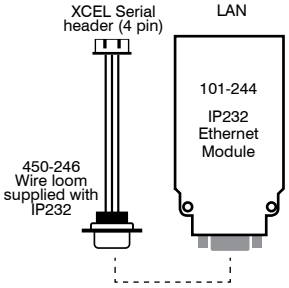

101-244 **Ethernet interface**.
Provides internet connectivity for use with third party apps such as iComms & aComms.

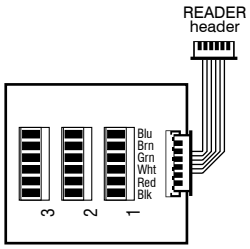

106-012 **Weigand Interface**.
Provides connection for up to 3 addressable Weigand Readers (Ness 101-014).
See Access Control options, pages 81-86.

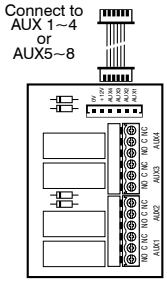

106-013 **Relay Board**.
Provides 4 relay outputs suitable for switching low voltage accessories.

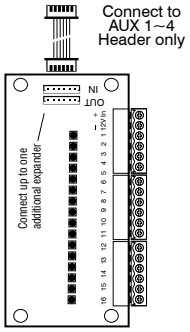

106-011 **Output Expander**.
Provides 16 programmable open collector outputs.
See page 59.

Both expander boards can co-exist.
Example, connect Output Expander to AUX1~4 and Relay Board to AUX5~8

Generic Detector Wiring Examples

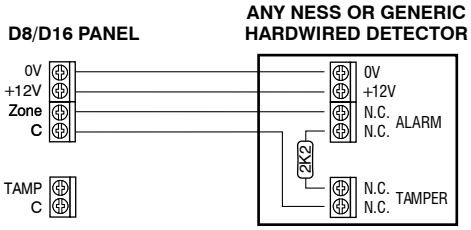

4 wire example

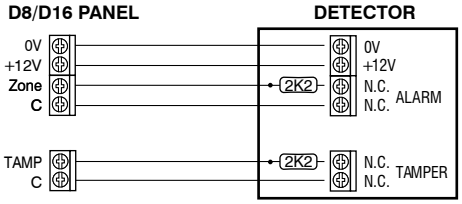

6 wire example
with 24hr Tamper

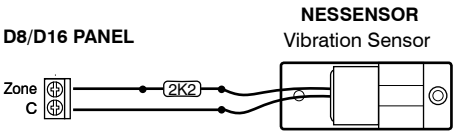

See P30E~P36E Zone Vibration Sensitivity, page 26

LUX HW Detector Wiring

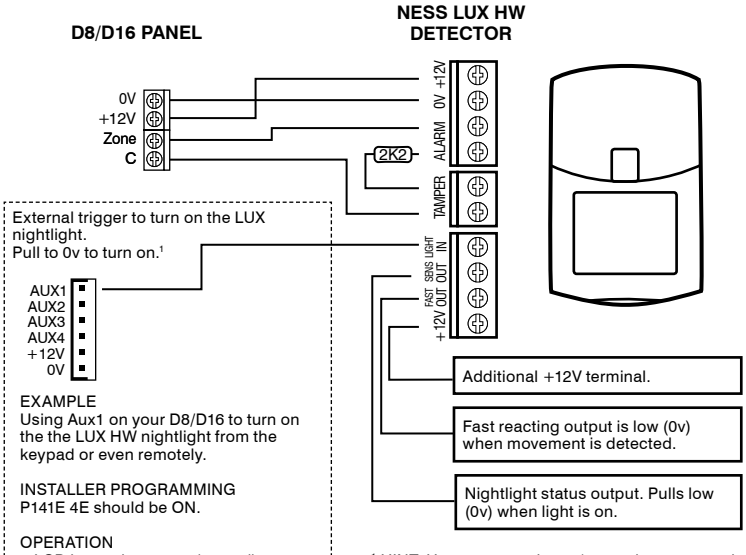

[1] HINT. Use a 450-159 loom (cut and use one end only into the panel's Aux header).
Or a 106-011 output expander or 106-013 relay board can be used and wired accordingly.

KEYPAD DISPLAY INDICATORS IN OPERATING MODE

DISPLAY	OFF	ON	FLASHING
ZONES 1-8 (or 1-16)	Zone is sealed.	Zone is unsealed.	Zone is in alarm.
OK TO ARM	Zone/s are unsealed OR Power fault OR Panel is armed	Ready to Arm	
1 ARMED	Panel is disarmed, or Area 1 is disarmed, if using Areas.	Panel is armed, or Area 1 is armed, if using Areas.	
2 ARMED	Area 2 is disarmed.	Area 2 is armed if using Areas.	
HOME	Home Mode is disarmed.	Panel is armed in Home Mode.	Day Mode enabled, (see page 29).
MEM	Normal.	Memory mode selected.	New alarm/s in memory.
	Normal.	Receiving a radio signal. (If radio fitted.)	A Radio Key or other radio device has low battery.
TAMPER	Normal.		Internal Tamper: Double Flash with long pause.External Tamper: Steady flash.
ZONE EXCLUDE	Normal.		Zone/s are Excluded.
+ − LOW	Normal.		The backup battery is low.
OFF	Normal.		Mains power is off.
CELL	Cellular signal strength status - alternates with real time clock display. Signal strength range is 00 (no signal) to 30 (Best signal). Signal strength below 5 means the antenna should be checked or moved to a better reception area. The **CELL** icon indicates various cellular conditions. 1. **CELL** with flashing signal strength 25 indicates the communicator is in use. 2. no with flashing **CELL** indicates a cellular communicator fault. 3. **CELL** with flashing noSC indicates 'no SIM' Card is fitted.		
TIME	Real time clock display - alternates with cellular signal strength status.*		
PROG	Normal.	User Program Mode.	Installer Program Mode.

KEYPAD BEEPS

BEEPS	MEANING
1 BEEP	Any key press.
3 BEEPS	Valid Command.
1 LONG BEEP	Error.
..10.. 10 BEEPS	Mains Power is off or Panel Battery is low or A Radio Device has sent a low battery signal or Telephone Line Fail has been detected.
Constant SLOW beeps	An AutoTime action is due to begin.
Constant FAST beeps	An AutoTime action will begin in *one minute.*

KEYPAD DISPLAY INDICATORS IN MEMORY MODE

KEYPAD ICON	MEMORY EVENT
Zone numbers 1–8 or 1–16	Zone alarm
(no icons displayed)	Panel Disarmed
ARMED	Panel Armed (or Area 1 Armed)
ARM2	Area 2 Armed
MAINS	Mains power failure
BATTERY	Low Battery
TAMPER + 1	Internal Tamper alarm
TAMPER + 2	External Tamper alarm
EXCLUDE + 1	Panic alarm
EXCLUDE + 2	Medical alarm
EXCLUDE + 3	Fire alarm
RADIO, EXCLUDE	Radio Key Panic alarm
RADIO, BATTERY, ZONE	Radio Device battery low, (Device number is indicated by zone lights)
RADIO, BATTERY, ARM	Radio Key battery low, (Radio Key number is NOT indicated)
RADIO, TAMPER, ZONE	Radio Device tamper alarm (Device number is indicated by zone lights)
RADIO, HOME, ZONE	Radio Supervision alarm (Device number is indicated by zone lights)
HOME, ZONE	Wired Zone Supervision alarm (Zone number is indicated by zone lights)

* The onboard clock is automatically updated from your cellular network.
You should only need to adjust clock settings if the panel is being used 'offline' without a SIM card.

KPX+ LCD KEYPAD

Panic Alarm
Press and hold the two emergency keys together for PANIC alarm.
See P126E 1E to enable. See P75E 3E, P191E 3E to enable panic alarm reporting

Fire Alarm
Press and hold the two **FIRE** (1 & 3) keys together for FIRE alarm.
See P126E 2E to enable keys. See P75E 4E, P191E 4E to enable fire alarm reporting.

Medical Alarm
Press the two Medical (4 & 6) keys together for Medical alarm.
See P126E 3E to enable keys. See P75E 2E, P191E 2E to enable medical alarm reporting.

The **CELL** icon indicates various cellular conditions.

1. **CELL** with flashing signal strength indicates the communicator is in use.
2. no with flashing **CELL** indicates a cellular comms fault.
3. **CELL** with flashing noSC indicates 'no SIM' Card is fitted.

Adjust LCD Backlight
Press and hold the **9** key to adjust the brightness of the LCD and keys backlighting. Release when the desired brightness is reached.

Note. Beep/Chime Volume and LCD Brightness settings are stored in the keypad. Adjust each keypad individually. Defaults to loudest/highest settings on power down.

Adjust Key Beep Volume
Press and hold the **P** key. Release when the desired volume is reached.

The volume level is displayed on the LCD during adjustment.

Adjust Chime Volume
Press and hold the **0** key. Release when the desired volume is reached.

The volume level is displayed on the LCD during adjustment.

Display Test

To display all available LCD icons press and hold the **E** key.

Display Test can be used in any mode.

SATURN+ LCD KEYPAD

All the key functions described above also apply to Saturn keypads.

Note that some Saturn keypad models do not have CELLULAR signal and real time clock display. Operational functions are unaffected, however it's recommended that at least one KPX+ keypad be installed to provide cellular signal indication.

Keypad Tamper Alarm
Applies to all keypads and is designed to prevent multiple attempts to guess a user code either at the keypad or by SMS.

A Keypad Tamper alarm is generated by 5 failed attempts to arm, disarm or any other command that requires entry of a user code.

Keypad Tamper Alarm sounds the Siren, Strobe and Reset outputs. A Keypad Tamper report is sent by CID or SMS if programmed by P75E, P191E.

Clear the alarm by entering a valid user code + E

NAVIGATOR TOUCH SCREEN KEYPAD

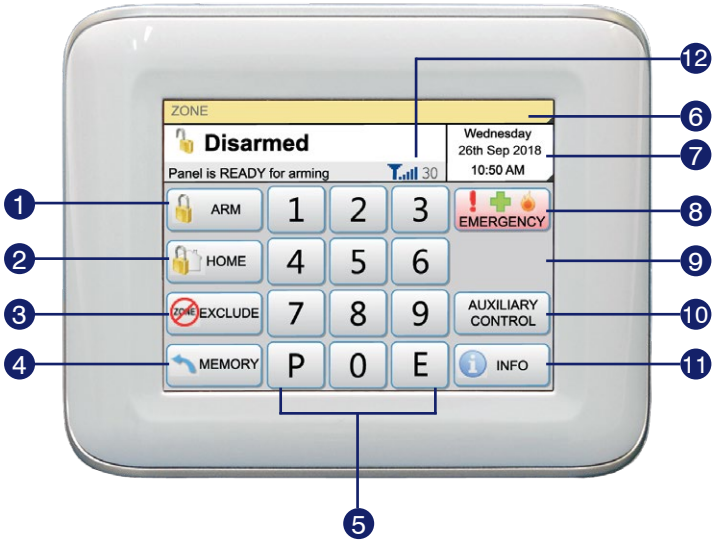

1. Touch to arm the system.
2. Touch to arm Home Mode.
3. Touch to Exclude zones.
4. Touch to view the event memory.
5. Numeric keypad.
6. Touch to view the full zone list.
7. Touch here to view the calendar.
   This area also displays System Alarms.
8. Touch to activate the Emergency Alarms.
9. This area displays current Emergency Alarms.
10. Touch to control the Auxiliary Outputs.
11. Touch to display the information screens.
12. Cellular signal strength display

ZONE 1 2 3 4 5 6 7 8 9 10 11 12 13 14 15 16

The Zone Status Bar displays the zone numbers of unsealed zones.

ZONE 1 - Front Door

If only one zone is unsealed its description will also be displayed.

ZONE 1 - Front Door

Zones which are currently in the alarmed state are displayed in flashing red text.

Zone numbers and descriptions.

Unsealed zones show a red indicator.

6

The Zone List display will show 8 zones for D8XCEL and 16 zones for D16XCEL.

Touch ✕ to close the window.

Note: Text Names displayed by the Navigator Keypad can only be programmed by SMS messaging as described on pages 21, 22.

This includes Zone Names, User Names and Installer Details for display on the Navigator keypad and for reporting by SMS messaging.

OPERATION SUMMARY

OPERATION	by **KEYPADS & SMS**	by **RADIO KEY**	by **ACCESS CARD** or **FOB**
to **ARM** The panel must initially be disarmed.	ALL KEYPADS ARM + E If the Arming Shortcut is enabled, P62E 5E or ARM + [UserCode] + E or [UserCode] + E If Code Only Arming has been enabled for that user code. Extra Option 4E SMS A[UserCode]E	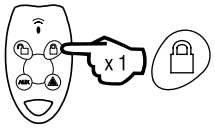 Press the ON button once.	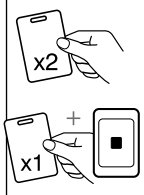 Present a Card or Fob twice. (if P301E 2E is on). Or, present a Card or Fob once + press button. (if P301E 3E is on).
to **DISARM** To disarm and/or reset alarms.	ALL KEYPADS [UserCode] + E SMS [UserCode]E	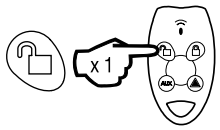 Press the OFF button once.*	 Present a Card or Fob once. (if P301E 4E is on).
to arm **HOME MODE** Area1 must initially be disarmed. Home Mode can be used if the panel is fully disarmed or if only Area2 is armed, see page 29 for more information.	ALL KEYPADS HOME + E (If the Home Shortcut is enabled, P62E 3E) or HOME + [UserCode] + E SMS H[UserCode]E	... or ... 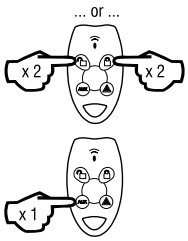 Press either the OFF button or the ON button twice within 4 seconds. (P69E 5E must be on). Or press the AUX button once. (If P120E 3E is on). RK4 radio key only. Radio Key Home Arm chirps can be enabled by P120E 2E. Radio Key Home Arm strobe flash can be enabled by P64E 6E, (off by default).	
PANIC alarm	KPX/SATURN * # together or * + [UserCode] + E or * + E (If Keypad Panic Shortcut is enabled, P62E 4E) NAVIGATOR press EMERGENCY then press PANIC SMS S[UserCode]E	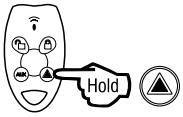 Press and hold the PANIC button for at least 4 seconds. If P68E 1E Double Press Radio Panic is enabled, press and hold twice for 4 sec.	
FIRE alarm **MEDICAL** alarm	FIRE Alarm KPX/SATURN 1 & 3 together NAVIGATOR press EMERGENCY then press FIRE MEDICAL Alarm KPX/SATURN 4 & 6 together NAVIGATOR press EMERGENCY then press MEDICAL NOTES The FIRE alarm sounds the siren using the FIRE siren sound and sends a fire report if programmed. The MEDICAL alarm triggers the strobe light if programmed and sends a medical report if programmed. Related options for Fire and Medical P75E, P77E, P191E, P193E, P161E, P126E 2E 3E, P69E 1E		
KEYPAD DURESS Keypad Duress allows the user to send a silent duress report while disarming, (if the system is being monitored by a central station).	ALL KEYPADS [5, 6, 8 or 9]+[UserCode] + E Add one these digits in front of a user code when disarming. This sequence will disarm the panel and sends a Duress report to the central station. This is a silent alarm with no indication at the keypad/s. (Report Keypad Duress must be enabled, P75E 1E)		
EXCLUDE ZONES EXCLUDE + E can only be used when the panel is disarmed. EXCLUDE + CODE + E can be used anytime.	ALL KEYPADS EXCLUDE + E (If the Exclude Shortcut is enabled, P62E 2E) then KPX/SATURN [ZoneNumber] + E [ZoneNumber] + E (Enter the zone number/s to be excluded.) NAVIGATOR [SelectZones] then KPX/SATURN press E to exit Exclude mode or NAVIGATOR press X to exit. The Exclude icon flashes constantly while zones are excluded. Excluded zones are automatically included on disarming.		
OPERATE AUX OUTPUTS The AUX outputs must be enabled for operation by keypad. See P141E 4E, P142E 4E, P143E 4E, P144E 4E.	KPX/SATURN [AuxNumber] + * to turn ON or PULSE an output. [AuxNumber] + # to turn off. NAVIGATOR press AUXILIARY CONTROL press AUX outputs on/off. SMS [UserCode]E[AuxNumber]E Note, via SMS enter the Aux output numbers as double digits. For example to turn on Aux1 send [UserCode] E11E (therefore Aux2 is 22, Aux3 is 33 etc.) More information next page.		

* If a user code is assigned to a radio key and has Extra Option 4E enabled, (Code Only arming), then pressing OFF toggles the arm/disarm state.

OPERATION BY SMS

SMS COMMANDS

COMMAND	OPERATION
A	ARM
H	HOME
X	EXCLUDE
P	PROGRAM[1]
E	ENTER
F	FIRE
D	MEDICAL
S	PANIC
C	OPERATE AUX OUTPUTS
T	TEXT[2]

[1] See page 17 for detail
[2] See page 21-22 for detail

SMS RESPONSES

SMS IS RECEIVED FROM A KNOWN PHONE NUMBER (one of the phone numbers programmed at P180E~P189E)

a) The panel will respond to any SMS command from a known phone number.

b) A correctly formatted command will be actioned and replied with ACK (Acknowledged).

c) If you send an incorrectly formatted SMS or the wrong user code the panel responds with NAK (Not ACK).

SMS IS RECEIVED FROM AN UNKNOWN PHONE NUMBER

a) If the user code is valid the panel will action the command and reply.

b) If the user code is not valid the panel will ignore the command and reply with the message "The SMS just received is wrong. No further responses until correct SMS received"

c) The panel ignores further attempts to operate it with an invalid user code.

d) Once a correct command with a valid user code is received the panel will action and reply.

e) If the valid user code is not the master user code, but the command requires the master code then the reply is “wrong message”

SUMMARY OF SMS COMMANDS

The following examples use the default Master Code of 123 as an example.

Substitute your own valid user code/s in operation.

OPERATION	SMS TO THE PANEL	SMS REPLY
ARM	A123E	A123E ACK arming status: AREA 1 ARMED IN EXIT DELAY zones unsealed: NONE zones in alarm: NONE zones excluded: NONE outputs status: ALL OFF Any unsealed zones, zones in alarm and excluded zones will listed as ZONE [x] or by name if named.
DISARM	123E	123E ACK arming status: DISARMED [plus zones and outputs status as per arming response above]
HOME mode	H123E	H123E ACK arming status: AREA 1 ARMED IN EXIT DELAY [plus zones and outputs status as per arming response above]
EXCLUDE zones (Example zones 4 & 5)	X123E4E5E	X123E ACK 4E ACK 5E ACK E ACK zones excluded: ZONE 4 ZONE 5
FIRE alarm[1] (Triggers the Fire Alarm, if enabled)	F123E	F123E ACK
MEDICAL alarm[2] (Triggers the Medical Alarm, if enabled)	D123E	D123E ACK
PANIC alarm[3] (Triggers the Panic Alarm, if enabled)	S123E	S123E ACK
Operate AUX outputs, eg Aux1 (Aux2 is 22, Aux3 is 33 etc) To enable AUX1 for remote operation see P141E 4E, page 64	C123E11ON C123E11OFF	11* ACK auxiliary outputs on: AUX1 11# ACK auxiliary outputs on: ALL OFF [or the Aux number/s if any are on]

[1] The FIRE alarm sounds the siren using the FIRE siren sound and sends a fire report if programmed.
[2] The MEDICAL alarm triggers the strobe light if programmed and sends a medical report if programmed.
[3] The PANIC alarm sounds the sirens and strobe if programmed.
Related options for Fire and Medical P75E, P77E, P191E, P193E, P161E, P126E 2E 3E, P69E 1E
Related options for Panic P61E 5E~8E

FACTORY DEFAULTS
Master Code: 123
Installer Code: 000000

USER PROGRAM MODE
User Program Mode allows the owner to program:

- All User Codes
- Entry Exit Times
- SMS Telephone numbers
- Real Time Clock settings

Note: The panel will automatically drop out of User Program Mode to Operating Mode if no keypad buttons are pressed for 4 minutes.

INSTALLER PROGRAM MODE
Installer Program Mode allows access to ALL program options.

NOTE 1. NessComms Direct Connect via the serial port requires the panel to be in Installer Program Mode.

NOTE 2. The panel will remain in Installer Program Mode until P + E is entered by keypad.

INSTALLER'S HANDY HINT
All inputs are disabled while the panel is in Installer Program Mode. This handy feature allows you to work on the system without triggering 24 hour zones such as tamper inputs.

HOW TO ENTER PROGRAM MODE

METHOD 1.
FIRST TIME PROGRAMMING – FROM POWER UP

1. Power-up with the J1 PROG/TAMP link OFF.
2. The panel is now in Installer Program Mode. Program the panel as required.
3. Replace the PROG/TAMP link (or Box Tamper lead) **before** you exit program mode. The link must be on in normal operating mode.

METHOD 2.
USING ANY KEYPAD TO ENTER PROGRAM MODE

The panel must be Disarmed.

1. Press P + [MasterCode] + E
   This is User Program Mode (PROG icon is ON).
   Various user options can be programmed in this mode.
2. Press P + [InstallerCode] + E
   This is Installer Program Mode (PROG icon is FLASHING).
   All program options can be programmed in this mode.

HOW TO EXIT PROGRAM MODE

Press P + E
Exits directly to Operating Mode (PROG icon is OFF).

SPECIAL FUNCTIONS IN PROGRAM MODE

SPECIAL FUNCTION	PROGRAM MODE	KEYPRESS
SEND COMMUNICATOR TEST REPORT Send a Test Report to the reporting number programmed at P170E.	USER	P 66666666 E *(eight 6's)*
SIREN TEST Turn the Siren, Reset and Strobe Outputs On. Pressing P E will stop the Siren Test (and also exits Program Mode).	USER or INSTALLER	P 77777777 E *(eight 7's)*
PANEL RESET This function resets the microprocessor. The effect is the same as powering down and powering up again. INSTALLER'S TIP: Use P88888888E prior to powering down for a short time. This will save the current Time Before Next Test Call and the Real Time Clock into permanent memory. On power up these times will be restored.	USER or INSTALLER	P 88888888 E *(eight 8's)*
DISPLAY FIRMWARE VERSION This function displays the panel firmware version when in program mode. Displayed in decimal format by the zone LEDs. Example, version V6.1 is displayed by flashing 6 followed by 1.	USER or INSTALLER	P 99999999 E *(eight 9's)*

Quick Start Programming Guide

Use one of these Quick Start programming summaries for fast setup of your control panel with typical Local, SMS Monitored or Central Station Monitored options.

QUICK START 1 - LOCAL SYSTEM

Just program a User Code and it's ready to go.

STEP	KPX+ or SATURN KP	DESCRIPTION	COMMENT
1	P 1 2 3 E	Enters User Program Mode.	PROG icon will turn on. (The default Master Code is 123)
2	P 2 0 1 E	Selects the option for User Code 1.	The existing code will be displayed.
3	_ _ _ _ E	Enter your new PIN code followed by E.	Keypad codes can be 3 to 6 digits in length. The PIN must not start with 0 (zero).
4	_ _ _ _ E	Enter your new PIN code again.	The new code will be displayed.
5	P E	To exit program mode.	PROG icon will turn off.

QUICK START 2 - FOR SMS SELF-MONITORING

Program at least one User Code and one mobile phone number.

STEP	KPX+ or SATURN KP	DESCRIPTION	COMMENT
1	P 1 2 3 E	Enters User Program Mode.	PROG icon will turn on. (The default Master Code is 123)
2	P 0 0 0 0 0 0 E	Enters Installer Program Mode.	PROG icon will flash. (The default Installer Code is 000000)
3	P 2 0 1 E	Selects the option for User Code 1.	The existing code will be displayed.
4	_ _ _ _ E	Enter your new PIN code followed by E.	Keypad codes can be 3 to 6 digits in length. The PIN must not start with 0 (zero).
5	_ _ _ _ E	Enter your new PIN code again.	The new code will be displayed.
6	P 1 8 0 E	Enter a mobile phone number followed by E	This mobile phone number will receive alarm reports, if enabled. 3 mobile numbers can be programmed to receive alarm reports. 1 mobile number can receive open/close reports, see P180E to P189E. See P190E to P194E to enable/disable various SMS alarm reports.
7	P E	To exit program mode.	PROG icon will turn off.

QUICK START 3 - FOR CENTRAL STATION MONITORING

Program a User Code, the Central Station reporting number and the Account Number.

STEP	KPX+ or SATURN KP	DESCRIPTION	COMMENT
1	P 1 2 3 E	Enters User Program Mode.	PROG icon will turn on. (The default Master Code is 123)
2	P 0 0 0 0 0 0 E	Enters Installer Program Mode.	PROG icon will flash. (The default Installer Code is 000000)
3	P 2 0 1 E	Selects the option for User Code 1.	The existing code will be displayed.
4	_ _ _ _ E	Enter your new PIN code followed by E.	Keypad codes can be 3 to 6 digits in length. The PIN must not start with 0 (zero).
5	_ _ _ _ E	Enter your new PIN code again.	The new code will be displayed.
6	P 1 7 0 E	Selects the option for Reporting No 1.	IP protocol is recommended
7	_ _ _ _ _ _ _ _ E	Enter the central station IP Address:Port followed by E	30 digits maximum.
8	P 7 2 E	Selects the option for Account No 1.	
9	_ _ _ _ E	Enter the Account number followed by E	4 digits maximum. The account number is supplied by your central monitoring station.
10	P E	To exit program mode.	PROG icon will turn off.

PROGRAMMING BY SMS

D8XCEL and D16XCEL 4G control panels can be operated and programmed by SMS (TXT) messaging from any mobile phone.

This section covers programming by direct SMS messaging from a mobile phone.

SMS commands are extremely flexible in their format.

THE PANEL CANNOT BE PROGRAMMED WHILE ARMED. SMS OR KEYPAD PROGRAMMING IS PERFORMED IN THE DISARMED STATE.

MULTIPLE COMMANDS
You can send multiple programming commands in one text message - in fact the message can be as long as the SMS limit of 160 characters per single message. See the Installer Manual for detailed instructions.

USE OF SPACES
The panel automatically ignores spaces in most SMS commands. However, spaces are important in Text Output commands, see page 21.

UPPER or LOWER CASE is ok
You can use either UPPER CASE or lower case characters in your messages, or even mixed case without a problem.

But **BEWARE OF COMMAS**
Commas are used to separate words when reprogramming text output, so use commas only when the command allows it.

SMS REPLIES: The panel replies to each programming command with a confirmation message. Incorrectly fomatted messages will be ignored.

ACK (Acknowledged): ACK is the panel saying 'Command received and applied'.

NAK (Not Acknowledged): The 'NAK' response indicates that the command was not accepted by the panel. Check the format of your SMS or perhaps the command should have been sent in Installer program mode.

TOGGLE OVER-RIDE
With some options U and Z can replace E to ensure an option is ON or OFF instead of toggled.
Example:
P39E1E toggles option 1
P39E1U sets ON option 1
P39E1Z sets OFF option 1
For experienced installers only, works only with 'AND' program options.

To **DELETE** a user code or phone number, enter V in place of the number.
Example.
P123EP000000EP180EVE deletes SMS phone number 1.

SMS PROGRAMMING COMMANDS

PROGRAMMING BY SMS FROM A SMARTPHONE

SMS programming commands are sent to the XCEL panel in essentially the same format as programming using a KPX+ or Saturn keypad.

Examples using the factory default master code: 123

EXAMPLE 1
Program the Entry Delay time to be 15 seconds

SMS SENT TO THE PANEL	SMS REPLY
P123E P26E 15E Entry Delay can be programmed in User Program Mode so the installer code is not required. This command is ok to send without spaces, ie. P123EP26E15E will also work.	M123E ACK M26E ACK 15E ACK ME ACK

The command comprises of three parts, where...

P123E	P26E	15E
Enters user program mode. 123 in this case is the Master code.	The option number for Entry Delay	Programs Entry Delay to be 15 seconds

EXAMPLE 2
Program User Code 2 to be 5678.

SMS SENT TO THE PANEL	SMS REPLY
P123E P202E 5678E 5678E User Codes can be programmed in User Program Mode so the installer code is not required. **User Codes must not start with zero.**	M123E ACK M202E ACK 5678E ACK 5678E ACK ME ACK

EXAMPLE 3 Sending multiple commands.
For example, to program all these changes in one message.
User code 6 change to 3456
Entry Delay change to 20 seconds
Exit Delay change to 50 seconds
Siren Time change to 3 minutes
Zone 2 change to an entry delay zone

SMS SENT TO THE PANEL	SMS REPLY
P123E P000000E P206E 3456E 3456E P26E 20E P28E 50E P29E 3E P41E 2E This command requires both the master Code and Installer Code to be included.	M123E ACK M000000E ACK M206E ACK 3456E ACK 3456E ACK M26E ACK 20E ACK M28E ACK 50E ACK M29E ACK 3E ACK M41E ACK 2E ACK ME ACK

Ness D8XCEL and D16XCEL series control panels have an on-board 4G communicator for reporting alarm messages to a central monitoring station. Ness recommends IP Protocol for most reliable back-to-base reporting. Contact ID (CID) is available as an option and should only be used if your central station does not offer IP protocols.

ARMOR IP ALARM MESSAGE FIELDS

Central station receiver setting for ArmorIP: UDP, UNENCRYPTED

ITEM	PREFIX	FULL FIELD	COMMENT
1	AC	AC0000xxxx	8 digit field with 4 digit account number xxxx in hex format (as set by P72E, P73E). The 1st 4 digits are always 0.
2	DF	DFCID	CID (for Contact ID message). Fixed for all messages.
3	SQ	SQ00000000	8 digit field. A hexadecimal number from 0 to 13 (19 decimal). The 1st 7 digits are always 0.
4	DD	DDACCT18 QXYZGG CCCF	ACCT = 4 Digit Account number (0-9, B-F) MT = 18 Q, 1 = New Event or Opening, 3 = New Restore or Closing, 6 = Status report XYZ = Event code (3 Hex digits 0-9,B-F) GG = Group or Partition number (2 Hex digits 0-9, B-F. CCC = Zone number (Event reports) or User # (Open / Close reports) (3 Hex digits 0-9,B-F) F last digit fixed
5	TT	"TTTIMEZONE HH:MM:SS DD/MM/YYYY"	The transmitted time. See below for time zone details.
6	PN	PN LOCATION	The panel name or location as renamed by the LOCATION in the text output table. Up to 32 characters. See SMS TEXT OUTPUT TABLE in the Installation manual.
7	PT	PTD8X4G	D8X4G or D16X4G depending on the product.
8	XP	XP000wwwww	Poll Window Time in minutes. A hexadecimal number set to 3 times the actual poll time + 30secs.
The time zones sent are derived from the time zone reported by the network, ie it is location dependant. The product presently has provision for the following time zones. AUS standard time zones: WST: UTC+08:00 Western Standard Time, ACST: UTC+09:30 Central Standard Time, AEST: UTC+10:00 Eastern Standard Time AUS daylight saving zones: CDST or ACDT: UTC+10:30, in South Australia and Broken Hill, New South Wales, EDST or AEDT: UTC+11:00, in New South Wales, the ACT, Victoria, and Tasmania NZ time zones: NZST: New Zealand Standard Time, CHAST: Chatham Island Standard Time			
ARMOR IP POLLING MESSAGE FIELDS			
1	AC	AC0000xxxx	8 digit field with 4 digit account number xxxx in hex format (as set by P72E, P73E). The 1st 4 digits are always 0.
2	SQ	SQ00000003	8 digit field The 1st 7 digits are always 0, LAST DIGIT IS 3.
3	DF	DFNULL	Fixed for all poll messages.
4	PN	PN LOCATION	The panel name or location as renamed by the LOCATION in the text output table. Up to 32 characters. See SMS TEXT OUTPUT TABLE in the Installation manual.
5	PT	PTD8X4G	D8X4G or D16X4G depending on the product.
6	XP	XP00000ppp	"Poll Time in minutes. A hexadecimal number equivalent to P85E setting. It is not the same as XP in normal message as it is the poll interval, not the poll window."

Contact ID Message format:

SSSS	Account Number
Q	Event qualifier 1=New Event or Open 3=Restore or Close
XYZ	Alarm type
GG	Group or Area designation
CCC	Alarm number dd=User ID (1 to 56) zz = Zone ID (1 to 16) aa = 01 Area 1 aa = 02 Area 2 aa = 01 Monitor area aa = 00 24 Hr Area K = Checksum (0 to 0f hex)

CONTACT ID REPORTS TABLE

REPORT NAME	SSSS	Q	XYZ	GG	CCC	SUFFIX
Zone 1– Zone 16 Alarm	ssss 18	q	**130**	aa	001–016	k
Duress	ssss 18	1	**121**	01	030	k
Keyswitch Panic	ssss 18	1	**120**	01	031	k
Keypad Panic	ssss 18	1	**120**	01	032	k
Radio Key Panic	ssss 18	1	**120**	01	1dd	k
Medical Alarm	ssss 18	1	**100**	01	033	k
Fire	ssss 18	1	**110**	01	034	k
Exit Install mode	ssss 18	1	**306**	01	035	k
External Tamper	ssss 18	q	**137**	01	040	k
Internal Tamper	ssss 18	q	**137**	01	041	k
Keypad Tamper	ssss 18	q	**137**	01	042	k
Radio Sensor Supervision	ssss 18	q	**381**	01	4zz	k
Radio Sensor Tamper	ssss 18	q	**383**	01	2zz	k
Radio Sensor Low Battery	ssss 18	q	**384**	01	3zz	k
Mains Fail	ssss 18	q	**301**	01	050	k
Panel Battery Fail	ssss 18	q	**309**	01	051	k
Open (Disarm)	ssss 18	1	**402**	aa	0dd	k
Force Open (Cancel)	ssss 18	1	**406**	aa	0dd	k
Close (Arm)	ssss 18	3	**402**	aa	0dd	k
Closing Extended	ssss 18	3	**464**	aa	0dd	k
Test Report	ssss 18	1	**602**	01	063	k
Zone 1-16 Manual Exclude	ssss 18	q	**573**	aa	001-016	k
Zone 1-16 Auto Exclude	ssss 18	q	**380**	aa	001-016	k

REPORT NAME	User ID
Arm/Disarm by Keyswitch	57
Shortcut Arm	58
Arm/Disarm by AutoTimer 1	91
Arm/Disarm by AutoTimer 2	92
Arm/Disarm by AutoTimer 3	93

REPORT NAME	User ID
Arm/Disarm by AutoTimer 4	94
Arm/Disarm by AutoTimer 5	95
Arm/Disarm by AutoTimer 6	96
Arm/Disarm by AutoTimer 7	97
Arm/Disarm by AutoTimer 8	98

SMS MONITORING

Powerful SMS accessibility includes the ability to arm and disarm, program the control panel, check system status, read alarm memory, receive alarm messages and operate AUX outputs all by SMS/TXT messaging.

SMS 'Self-monitoring' reports include Arm/disarm reports by Area and User, Zone alarms and Restorals, System Alarms such as AC Fail and Low Battery, Panic and Duress alarms.

While SMS reporting is a powerful and useful feature it is dependent on the integrity and availability of the cellular network.

As with any SMS message it is possible that SMS monitoring reports may be delayed or fail to be delivered. Such failures are a function of the cellular network/s and beyond the control of Ness Corporation.

Ness recommends central station monitoring as your primary monitoring path.

SMS Reporting Message Format

Example 1 - Alarm from Zone 2

```
NESS security report
from MYPANEL
ALARM Z2 RUMPUS AREA 1
Tue 7 Aug 2018 4:07:22pm 1/1
```

SMS MESSAGE EXPLAINER

NESS security report Identifies the message as a Ness alarm panel report.

MYPANEL identifies the premises. This ID can be programmed by SMS using the LOCATION command. See page 21.

ALARM Tells us there has been an alarm

Z2 RUMPUS What caused the alarm. In this case Zone 2 which has been renamed Z2 RUMPUS. (The zone name can be programmed by SMS, otherwise the panel just reports the zone number). See page 21

AREA 1 Identifies the zone as belonging to Area 1

Tue 7 Aug 2018 4:07:22pm Time and date of the event

1/1. Means message 1 of 1. Long SMS messages are split into multiple messages of 160 characters each

Example 2 - Area 1 was Armed by User 1

```
NESS security report
from MYPANEL
ARMED USER 1 AREA 1
Tue 7 Aug 2018 4:57:54pm 1/1
```

Arm/disarm reports by SMS require these two options set:

P194E 1E, 2E, Enable SMS Open/Close Reports - page 54.
P183E program a phone number to receive SMS Open/Close reports - p48.

Example 3 - Mains Fail report

```
NESS security report
from MYPANEL
POWER FAILURE POWER
MAIN 12V
Tue 7 Aug 2018 5:30:00pm 1/1
```

Mains Fail reports by SMS can be enabled/disabled by option P191E 14E, page 50.

Message Format.

i [Master Code] E [Command]

NOTES

Status requests can be made at any time including when the panel is armed, disarmed or in program mode.

REQUEST PANEL STATUS BY SMS

D8XCEL and D16XCEL panel status can be interrogated by SMS. Check the sealed/ unsealed status of zones, check miscellaneous alarm status and check if the system is armed, all by SMS messaging and reply.

Request Status Commands Example.

SMS SENT TO THE PANEL	SMS REPLY
i123E ZU To request zones unsealed.	status report zones unsealed ZONE 3 ZONE 4 Tues 18 Sep 2018 10:11 1/1 In this example, zones 3 and 4 are unsealed, followed by the date stamp and message number (1 of 1)

Description	SMS COMMAND	Status update
Zone Input Unsealed	ZU	LIST Zones 1-16
Zone in Alarm	ZA	LIST Zones 1-16
Zone Excluded	ZX	LIST Zones 1-16
Zone Supervision Fail	ZS	LIST Zones 1-16
Zone Doors Open (Wireless Reeds)	ZD	LIST Zones 1-16 wireless reed switch unsealed
Zone Detector Low Battery (Wireless PIRs)	ZB	LIST Zones 1-16 wireless PIR low battery
Zone Detector Tamper (Wireless PIRs)	ZT	LIST Zones 1-16 wireless device tamper alarm
Miscellaneous Alarms	MISC	List one or more miscellaneous alarm: Duress / Panel Tamper Panic / Keypad Tamper Medical / Pendant Panic Fire / Panel Battery Low Instal End / Mains Fail Ext Tamper
Status of armed conditions	ARM	List one or more armed status: Area 1 Armed / Entry Delay 1 ON Area 2 Armed / Entry Delay 2 ON Area 1 Fully Armed / Manual Exclude Mode Area 2 Fully Armed / Memory Mode Home Armed / Day Zone Select Day Mode Armed
Status of outputs	OUTPUT	List the status of various outputs: Siren Loud / Aux1 Siren Soft / Aux2 Siren Soft Home / Aux3 Siren Fire / Aux4 Strobe / Home Out Reset / Power Fail Sonalert / Panel Batt Fail Keypad Display Enable / Tamper Xpand
Panel firmware version	MOD	Lists the panel's model and firmware version
Status of auxiliary outputs	AUX	Lists the status of Auxiliary outputs 1 to 8. If the Aux outputs have been renamed they will be listed accordingly.

Message Format.

T [Master Code]E, ShortcutName,Rename

NOTES

Beware of spaces in this command.

Do not insert any spaces before a command name.

For example, if renaming Location...

This is ok T123E,LCN,My House

The space between My and House is ok but avoid any other spaces.

See page 22 for a table of text names and shortcut names.

CHANGING TEXT OUTPUT

D8XCEL and D16XCEL have an extensive library of text descriptions used in SMS messaging, and also give the user the ability to customise the text output to suit individual needs.

For example, the default text sent for a zone alarm is:

NESS security report
from LOCATION
ALARM ZONE 3 AREA 1
Tue 7 Aug 2018 4:07:22pm 1/1

XCEL allows most words in this message to be modified.

Example, to rename ZONE 1

The zone name is set by the text output shortcut name Z1. (See the table, page 22).

SMS SENT TO THE PANEL	SMS REPLY
T123E,Z1,Z1 FRONT DOOR	text report changes made ZONE 1,Z1 FRONT DOOR 1/1

Zone 1 will now be identified in SMS reports as "Z1 FRONT DOOR"

SENDING MULTIPLE TEXT CHANGES IN ONE MESSAGE

Let's say you want to customise the panel's name and rename zone 2.

The panel name is set by the text output named LOCATION (LCN) and the zone name by the text ZONE 2 (Z2). (See the table, page 22).

To rename LOCATION and ZONE 2:

SMS SENT TO THE PANEL	SMS REPLY
T123E,LCN,MYHOME, Z2,Z2 RUMPUS	text report changes made LOCATION,MYHOME,ZONE 2,Z2 RUMPUS 1/1

The panel will now be identified in SMS reports as MYHOME and zone 2 as "Z2 RUMPUS"

Using the same method, all zone names and other descriptions in the SMS message can be renamed. Refer to the text table on the following page.

DELETING A WORD

Text output words can be also be deleted by ending blanks instead of new text.

For example to delete the zone 1 description "Z1 FRONT DOOR" insert a space followed by a comma in place of the text.

SMS SENT TO THE PANEL	SMS REPLY
T123E,Z1, ,	text report changes made ZONE 1, 1/1

SMS - TEXT OUTPUT TABLE

Default NAME (Shortcut NAME)*	Navigator Installer Information Screen	Your data
INSTALLER NAME 1 (IN1)	Name	
INSTALLER COMPANY 1 (IC1)	Company	
INSTALLER ADDRESS 1 (IA1)	Address Line 1	
INSTALLER ADDRESS 3 (IA3)	Address Line 2	
INSTALLER TEL NO 1 (IT1)	Phone	
INSTALLER MOBILE 1 (IM1)	Mobile	
INSTALLER EMAIL 1 (IE1)	Email	

Text names most commonly customised

Default NAME (Shortcut NAME)*	RENAME
LOCATION (LCN)	
USER 1 (U1)	
USER 2 (U2)	
USER 3 (U3)	
USER 4 (U4)	
USER 5 (U5)	
USER 6 (U6)	
USER 7 (U7)	
USER 8 (U8)	
USER 9 (U9)	
USER 10 (U11)	
USER 11 (U11)	
USER 12 (U12)	
USER 13 (U13)	
USER 14 (U14)	
USER 15 (U15)	
USER 16 (U16)	
USER 17 (U17)	
USER 18 (U18) ... to User 56 (U56)	
ZONE 1 (Z1)	
ZONE 2 (Z2)	
ZONE 3 (Z3)	
ZONE 4 (Z4)	

Default NAME (Shortcut NAME)*	RENAME
ZONE 5 (Z5)	
ZONE 6 (Z6)	
ZONE 7 (Z7)	
ZONE 8 (Z8)	
ZONE 9 (Z9)	
ZONE 10 (Z10)	
ZONE 11 (Z11)	
ZONE 12 (Z12)	
ZONE 13 (Z13)	
ZONE 14 (Z14)	
ZONE 15 (Z15)	
ZONE 16 (Z16)	
AUX1 (X1)	
AUX2 (X2)	
AUX3 (X3)	
AUX4 (X4)	
AUX5 (X5)	
AUX6 (X6)	
AUX7 (X7)	
AUX8 (X8)	
DOOR 1 (D1)	
DOOR 2 (D2)	
DOOR 3 (D3)	

Additional text names available for customisation

Default NAME				
1st NAME	AUTO INCLUDE	FIRE	NESS	SECURITY SYSTEM
24 HR	BATTERY	FIRE SIREN	NO AREA	SHORT ARM
ACCESS	BATTERY FAILURE	from	NORMAL	SIREN
ACK	BATTERY NORMAL	FROM	OUTPUT OFF	SOFT MONITOR
ALARM	CLOCK AND DATE	from PENDANT	OUTPUT ON	SOFT SIREN
ALARM REPORT	UPDATE	HOME	PANIC	SONALERT
ALARM RESTORE	DAY	INTERNAL	PENDANT	START
AREA 1	DIALLER	KEYPAD	POWER	STROBE
AREA 2	DISARMED	KEYPAD DISPLAY	POWER FAILURE	SUPERVISE
ARMED AWAY	DOOR OPEN TOO LONG	ENABLE	POWER NORMAL	SUPERVISION FAILURE
ARMED DAY	DURESS	KEYSWITCH	RADIO DETECTOR	SUPERVISION NORMAL
ARMED HOME	EMERGENCY	MAIN 12V	REAL TIME CLOCK	TAMPER
ARMING DELAYED	EMERGENCY REPORT	MAIN UNIT	REPORT FAILURE	TAMPER NORMAL
Ask	END	MANUAL EXCLUDE	REPORT NORMAL	TAMPER UNSEALED
AUTO ARM DELAY	EXIT DELAY	MANUAL INCLUDE	RESET	TEXT CHANGES
AUTO EXCLUDE	EXTERNAL	MEDICAL	SEALED	UNSEALED
	FAILURE	NAK	SECURITY REPORT	USER
				WARNING REPORT

*Shortcut names are provided for simplified programming by SMS. (Omit the brackets).
See page 21 Changing Text Output

P101E – P116E

P201E – P256E

PROGRAM MODE LEVEL
User, Installer

FACTORY DEFAULT
User Code 1: 123
All other codes: [blank]

NOTES
1. To clear all codes (except the Installer Code), enter P98E in Installer Program mode. This also defaults user code 1 to 123. See Page 58.
2. Open/Close reports are identified by user number when the control panel is base station monitored.

RELATED OPTIONS
Installer Code. See Page 15, How To Enter Program Mode.
Page 58, Programming The Installer Code.
Installer Code Default 000000

RELATED OPTIONS
Programming Radio Codes, page 79

IMPORTANT NOTES

A User Code can be a Keypad Code, Radio Code or Reader Code, but only one type at any one time.

By factory default all user codes are Keypad Codes.

Any user codes not assigned to be Radio Codes or Reader Codes remain as Keypad Codes.

When a user code is selected as a Radio Code or Reader Code, its Keypad Code (if any) is automatically deleted. The same applies to Radio Codes and Reader Codes - their codes are auto deleted when the code is changed to any other type.

User Code 1 is the Master Code and is always a keypad code and cannot be programmed to be a Radio Code or Reader Code.

User Codes must not start with zero. eg, 01234 is not allowed.

PROGRAMMING USER CODES BY SMS SMS

User codes can also be programmed using XCEL app or by direct SMS messaging from a phone.

Example:
To program user code 2 to be 5678
SMS to the panel:
P123E P202E 5678E 5678E

See more examples on page 17

RADIO DEVICE PROGRAMMING SEE PAGES 78-79

USER CODES, **PROGRAMMING BY KEYPAD**

See page 17 for SMS programming instructions.

D8XCEL and D16XCEL have 56 User Codes which are used to operate the panel by a variety of methods.

Each User Code can be assigned to either a KEYPAD CODE or a RADIO KEY or an ACCESS CARD.

KEYPAD (PIN) CODES

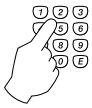

Up to 56 Keypad Codes can be used at up to 3 wired keypads for controlling all panel functions including Arming/Disarming, Home Mode, Panic, memory recall and much more.

- Keypad Codes can be 3 to 6 digits in length and can be individually programmed and deleted.
- Keypad Codes can optionally be programmed to be "Arm Only" codes.
- User Code 1 is also the Master Code which is used to enter Client Program mode.
- All 56 User Codes are Keypad Codes by default. User Codes can be programmed to be Radio Codes or Access Cards as required.
- **USER CODES MUST NOT START WITH ZERO (0). The panel will allow codes with leading zeros but the code will NOT operate the panel.**
- All codes must be unique to each other. Codes are rejected if already used. Some codes that are similar to existing codes may also be rejected.

PROGRAMMING KEYPAD CODES

Press P [Any user option number from 201 to 256] E (The existing code is displayed one digit at a time).
Press [NEW CODE] E [NEW CODE AGAIN] E (The new code is displayed).

Example: To program the Master Code to be 1234.

Press P201E 1234E (1 beep) **1234E** (3 beeps)

When replacing a Keypad Code, the old code does not need to be deleted first. The new code will overwrite the old code.

DELETING KEYPAD CODES

To delete a User Code without programming a new code, press the MEMORY key in place of the code.

Example: To delete User Code 2, press **P202E MEMORY E**

A keypad code only needs to be deleted if you're not replacing it with a new code. Note that User Code 1 (Master Code) cannot be deleted but can be reprogrammed.

ARM ONLY CODES

'Arm Only' is an extra option for user codes. See next page for further information.

User Codes 2–56 can optionally be programmed as Arm Only Codes, which can Arm but cannot Disarm the panel. (Used for cleaners, temporary staff, etc).

Example: To program User Code 2 to be 1234 and an Arm Only code.

Press P202E EXCLUDE E 3E EXCLUDE E 1234E 1234E
(EXCLUDE E enters Extra Options mode, 3E enables the Arm Only option, then EXCLUDE E toggles back to normal user code program mode.)

When the code is viewed in program mode, the ARMED icon is briefly displayed before the digits of the code.

To disable the Arm Only feature for a keypad code, simply enter the option for that code, press EXCLUDE E to view Extra Options then press 3 E without re-entering a new code. This retains the existing code and toggles off the Arm Only feature.

The Arm Only feature also applies to Radio Keys and Access Cards.

Arm Only codes can also arm the panel directly from Home Mode. (Normally, user codes can arm the panel only if it is fully disarmed).

Arm Only codes can also arm Home Mode as normal.

Radio Keys programmed as an Arm Only can toggle the armed/disarmed state of the panel using the OFF button on the radio key.

USER CODE OPTIONS TABLE

KPX+ EXCLUDE+E toggles Extra Options mode.
NAVIGATOR Press Extra Code Options.
(Installer Program mode only)

USER CODE	OPTION NO.	KEYPAD PIN	1E AREA 1 CODE	2E AREA 2 CODE	3E ARM ONLY	4E "CODE ONLY" ARM (REX CODE)	5E RADIO CODE	6E Reader Code 1	7E Reader Code 2	8E Reader Code 3	9E Au-toTime Code
1 (Master)	P201E	123	ON	ON							
2	P202E		ON								
3	P203E		ON								
4	P204E		ON								
5	P205E		ON								
6	P206E		ON								
7	P207E		ON								
8	P208E		ON								
9	P209E		ON								
10	P210E		ON								
11	P211E		ON								
12	P212E		ON								
13	P213E		ON								
14	P214E		ON								
15	P215E		ON								
16	P216E		ON								
17	P217E		ON								
18	P218E		ON								
19	P219E		ON								
20	P220E		ON								
21	P221E		ON								
22	P222E		ON								
23	P223E		ON								
24	P224E		ON								
25	P225E		ON								
26	P226E		ON								
27	P227E		ON								
28	P228E		ON								
29	P229E		ON								
30	P230E		ON								
31	P231E		ON								
32	P232E		ON								
33	P233E		ON								
34	P234E		ON								
35	P235E		ON								
36	P236E		ON								
37	P237E		ON								
38	P238E		ON								
39	P239E		ON								
40	P240E		ON								
41	P241E		ON								
42	P242E		ON								
43	P243E		ON								
44	P244E		ON								
45	P245E		ON								
46	P246E		ON								
47	P247E		ON								
48	P248E		ON								
49	P249E		ON								
50	P250E		ON								
51	P251E		ON								
52	P252E		ON								
53	P253E		ON								
54	P254E		ON								
55	P255E		ON								
56	P256E		ON								

USER CODES

ASSIGNING EXTRA OPTIONS

Each user code has several "extra options" which can be assigned when programming the code or at any time later.

In **NORMAL USER CODE PROGRAMMING mode** you can do the following:

Program Keypad Codes (see page 23).
Program Radio Codes (see page 79).
Program Access cards (see page 81).
View radio signal strength (see page 77).

In **EXTRA OPTIONS mode** you can assign several powerful functions to each user code. See below.

To view and program the Extra Options:

KPX+ 1. Select a User Code (P201–P256E)
2. Press EXCLUDE E. *The Exclude light turns ON.*
NAVIGATOR Press Extra Code Options.

The following Extra Options can now be changed:

1E AREA 1 CODES. Assign/remove user codes to Area 1. (By default all user codes are assigned to Area 1.

2E AREA 2 CODES. Assign/remove user codes to Area 2.

ⓘ User codes can be assigned to Area 1, Area 2, both areas or no areas.

ⓘ An Area will not arm unless it has one or more zones assigned to it (P45E, P46E).

ⓘ If a code is not assigned to any Area/s, the code can be used for special functions such as to trigger outputs.

3E ARM ONLY. User Codes 2–56 can be programmed to Arm but not Disarm the panel. (See page 23).

4E "CODE ONLY" ARMING. Enables selected user codes to allow "code only arming". Arming can then be done with or without the use of the arm key on the keypad.

ⓘ In the case of radio codes the radio key OFF button will toggle the armed state of the area assigned to the radio key.

ⓘ If the User code is assigned to both AREA 1 and AREA 2. If AREA 1 is already armed, then entering the code will disarm AREA 1 - but arm AREA 2.

If the intention is to either ARM or DISARM both areas using this code then ARM + [code] must be used first to arm both areas. Once both are armed they can be disarmed.

ⓘ If in Home mode, the action is to exit Home mode.

ⓘ Codes selected for Code Only Arming and not assigned to any areas are automatically REX codes. See page 86.

5E RADIO CODE. Enables selected user codes as Radio Codes for operation by Ness Radio Key or Radio Keypad. (Page 79 - how to program Radio Codes).

6E READER CODE 1. Enables user codes as Access Control codes assigned to Reader 1. (Page 81 - Access Cards).

7E READER CODE 2. Enables user codes as Access Control codes assigned to Reader 2. (Page 81 - Access Cards).

8E READER CODE 3. Enables user codes as Access Control codes assigned to Reader 3. (Page 81 - Access Cards).

ⓘ *A user code can be assigned to any one, two or all three access control readers.*

9E ENABLE FOR AUTOTIME. Enables user codes for use by AutoTime. (See page 76, Enable/Disable User Codes Via AutoTimer).

Option No.	Description	Default	Note
P26E	Entry Delay Time 1	20	seconds
P27E	Entry Delay Time 2	6	x10 = 60seconds
P28E	Exit Delay Time	60	seconds
P29E	Siren Reset time	5	minutes

P26E — ENTRY DELAY TIME1

PROGRAM MODE LEVEL
User, Installer

FACTORY DEFAULT
20 (seconds)

NOTES
- Programmable from 1 – 99 seconds.
- The Entry Delay Time also sets the delay before Auto Re-Arming.

RELATED OPTIONS
P120E 7E Entry Delay Extender

Entry Delay Time 1 is the time given to disarm the panel after an Entry Delay 1 zone is unsecured.

Entry Delay Time1 can be from 1 to 99 seconds in 1 second increments. Enable option P120E 7E Entry Delay Extender for maximum of 990 seconds.

KPX+	P26E [New Time] E
NAVIGATOR	Entry/Exit Delay > Entry Delay Time 1 > Enter new time E
SMS*	P[MasterCode]E P26E [NewTime]E

P27E — ENTRY DELAY TIME2

PROGRAM MODE LEVEL
User, Installer

FACTORY DEFAULT
6 (=60sec)

NOTES
Programmable from 10 – 990 seconds

Entry Delay Time2 is the time given to disarm the panel after an Entry Delay2 zone is unsecured.

The Entry Delay Time2 setting is from 10 to 990 seconds (1 – 99).

Note: The Entry Delay Time2 is set in 10 second increments so that a value setting of 6 means a 60 seconds delay.

KPX+	P27E [New Time] E
NAVIGATOR	Entry/Exit Delay > Entry Delay Time 2 > Enter new time E
SMS*	P[MasterCode]E P27E [NewTime]E

P28E — EXIT DELAY TIME

PROGRAM MODE LEVEL
User, Installer

FACTORY DEFAULT
60 (seconds)

NOTES
- Programmable from 1 – 99 seconds

RELATED OPTIONS:
P62E 8E Exit Time x10

Exit Delay Time is the time given to secure and depart the premises after the panel is armed. All zones (except 24hr zones) are inactive during the Exit Delay time.

The Exit Delay Time setting is from 1 to 99 seconds in 1 second increments.

KPX+	P28E [New Time] E
NAVIGATOR	Entry/Exit Delay > Exit Delay Time 1 > Enter new time E
SMS*	P[MasterCode]E P28E [NewTime]E

P29E — SIREN RESET TIME

PROGRAM MODE LEVEL
Installer

FACTORY DEFAULT 5
(minutes)

NOTES
- Programmable from 1 – 99 minutes.
- Siren times of longer than 5 minutes are contrary to noise pollution regulations in most areas.

Siren Reset Time sets the duration of the Siren and Reset outputs.

Programmable from 1 to 99 minutes in 1 minute increments.

KPX+	P29E [New Time] E
NAVIGATOR	P29E > Siren Reset Time > Enter new time E
SMS*	P[MasterCode]E P[InstallerCode]E P29E [NewTime]E

* SMS programming shows the full SMS string to send. KPX+ and NAVIGATOR programming assumes the panel is already in program mode.

	Option No.	Description	ZONES 1–8 (D8 & D16) 1	2	3	4	5	6	7	8	ZONES 9–16 (D16) 9	10	11	12	13	14	15	16
	P30E	**NORMAL**	ON	ON	ON	ON	ON	ON	ON	ON	ON	ON	ON	ON	ON	ON	ON	ON
VIBRATION OPTIONS	P31E	Vibration EXTREME*																
VIBRATION OPTIONS	P32E	Vibration HIGHEST																
VIBRATION OPTIONS	P33E	Vibration HIGH																
VIBRATION OPTIONS	P34E	Vibration MEDIUM																
VIBRATION OPTIONS	P35E	Vibration LOWER																
VIBRATION OPTIONS	P36E	Vibration LOWEST																
	P37E	1 second ZONES																
	P38E	3 second ZONES																

* Extreme sensitivity (P31E) **should not be used**. It is provided as a guide only

P30E – P36E

VIBRATION SENSITIVITY

PROGRAM MODE LEVEL
Installer

FACTORY DEFAULT
Normal sensitivity.
P30E, all zones = ON

NOTES
- Sensitivity can be individually programmed for each zone.
- Zones are allocated to one sensitivity level at any one time. Turning a zone ON in a sensitivity level, turns the zone OFF in any other sensitivity level.
- To revert zone sensitivity back to Normal, turn on the required zone/s at P30E.

Each zone has individually adjustable sensitivity for connection of Nessensor Vibration Sensors. Zone sensitivity is adjusted by toggling zones ON in options P30E to P36E.

P30E is Normal Sensitivity, vibration analyser disabled. This is used for normal alarm devices. Zone response time, 200ms.

P31–36E are the options for the 6 levels of vibration sensitivities. P31E is the most sensitive setting.

KPX+	P30E ~ P36E [Zone Number] E to enable a sensitivity level per zone
NAVIGATOR	P30E > View Zones > Select zones (Press Next/Previous Option)
SMS*	P[MasterCode]E P[InstallerCode]E P30E [Zone Number] E eg. Zones 3 & 4 to be Medium sensitivity P[MasterCode]E P[InstallerCode]E P34E 3E 4E

P37E – P38E

LONG RESPONSE ZONES

PROGRAM MODE LEVEL
Installer

FACTORY DEFAULT
all off

NOTES
- A Long Response Zone cannot be a Normal Zone or Vibration zone at the same time.
- To convert zone/s back to a Normal Zone, turn on the required zone/s at P30E.

RELATED OPTIONS
P301E 5E-7E Request To Exit (REX)

Long Response Zones are normal alarm zones with a long reaction time. Individual zones can be programmed to have either a 1 second response (P37E) or 3 second response (P38E).

This is useful where zones 5, 6 or 7 have been programmed as REX inputs for access control purposes, (P301E 5E-7E). To prevent accidental door opening, the REX button then must be pressed and held for 1sec or 3sec, as programmed.

KPX+	P37E ~ P38E> Enter [Zone Number] E to enable that sensitivity
NAVIGATOR	P37E > View Zones > Select zones (Press Next/Previous Option)
SMS*	P[MasterCode]E P[InstallerCode]E P37E [Zone Number] E

ADJUSTING NESSENSORS

Nessensors are sensitive to high frequencies and insensitive to low frequencies. Therefore it is not necessary to apply much force to the protected structure, rather a very rapid succession of blows.

The sensitivity has been correctly adjusted when a single blow applied with a soft object (e.g. by hand) does not cause an alarm whereas a rapid series of blows (using a metal object such as a screwdriver blade) will cause an alarm.

NESSENSOR™ Vibration Sensor
Part No. VIB500

In addition to zone sensitivity adjustment, the overall sensitivity of the Nesssensor can be adjusted by rotating the body of the Nesssensor within its bracket.

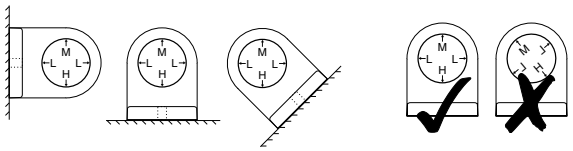

The Nessensor bracket must always be mounted horizontally and the arrow must point up for any required setting.

* SMS programming shows the full SMS string to send. KPX+ and NAVIGATOR programming assumes the panel is already in program mode.

ZONE DELAY TYPES

Only one option per zone can be selected. For example; a zone cannot be instant and delayed at the same.

Option No.	Description	ZONES 1–8 (D8 & D16) 1	2	3	4	5	6	7	8	ZONES 9–16 (D16) 9	10	11	12	13	14	15	16
P39E	DOUBLE TRIGGER zones																
P40E	INSTANT zones			ON	ON	ON	ON	ON	ON	ON	ON	ON	ON	ON	ON	ON	ON
P41E	ENTRY DELAY 1 zones	ON															
P42E	HANDOVER zones		ON														
P43E	ENTRY DELAY 2 zones																
P44E	LOCKOUT zones (Reset O/P)	ON	ON	ON	ON	ON	ON	ON	ON	ON	ON	ON	ON	ON	ON	ON	ON
P45E	AREA 1 zones	ON	ON	ON	ON	ON	ON	ON	ON	ON	ON	ON	ON	ON	ON	ON	ON
P46E	AREA 2 zones																
P51E	HOME zones																
P52E	24HR zones																
P53E	DAY zones																

P39E — DOUBLE TRIGGER ZONES

PROGRAM MODE LEVEL
Installer

FACTORY DEFAULT
All OFF: No Double Trigger zones.

NOTES
- Double Trigger is useful for preventing unwanted alarms from zones in harsh environments such as sheds and garages.
- (KPX+) **0E** will turn all selections OFF. **MEMORY E** will turn all selections ON.

Zones programmed to Double Trigger will recognise an alarm condition if:
- The zone has been triggered twice within a 4 minute period.
- If any 2 zones (both programmed for double trigger), each trigger once.
- The zone is left unsealed for longer than 15 seconds.

KPX+	P39E [Zone Number] E to enable/disable zones
NAVIGATOR	P39E > Select zones
SMS*	P[MasterCode]E P[InstallerCode]E P39E [Zone Number] E

P40E — INSTANT ZONES

PROGRAM MODE LEVEL
Installer

FACTORY DEFAULT
D8, 3E–8E ON: Zones 3–8 Instant.
D16, 3E–16E ON: Zones 3–16 Instant.

NOTES
When a zone is selected for this type, it is automatically deselected from any other zone type in the DELAY GROUP.

RELATED OPTIONS
P41E, P42E, P43E

Instant Zones operate only in the Armed state. When Armed at the expiry of exit time, Instant Zones will activate assigned outputs immediately when triggered.

KPX+	P40E [Zone Number] E to enable zones
NAVIGATOR	P40E > Select zones
SMS*	P[MasterCode]E P[InstallerCode]E P40E [Zone Number] E

P41E — ENTRY DELAY1 ZONES

PROGRAM MODE LEVEL
Installer

FACTORY DEFAULT
1E ON: Zone 1 has Entry Delay1.

NOTES
When a zone is selected for this type, it is automatically deselected from any other zone type in the DELAY GROUP.

RELATED OPTIONS
P60E 1E Entry Beeps
P40E, P42E, P43E

Entry Delay1 zones operate only in the Armed state. When Armed, at the expiry of exit time these zones will activate the Entry Delay Timer1 (P26E) when they are triggered. If the panel is not disarmed before the expiry of the Entry Delay Timer1, the alarm outputs will be activated.

KPX+	P41E [Zone Number] E to enable zones
NAVIGATOR	P41E > Select zones
SMS*	P[MasterCode]E P[InstallerCode]E P41E [Zone Number] E

KPX+ PRO TIP

When selecting zones, **MEMORY E** selects all zones, **0 E** deselects all zones

* SMS programming shows the full SMS string to send. KPX+ and NAVIGATOR programming assumes the panel is already in program mode.

P42E — HANDOVER ZONES

PROGRAM MODE LEVEL
Installer

FACTORY DEFAULT
2E ON: Zone 2 is a Handover zone.

NOTES
When a zone is selected for this type, it is automatically deselected from any other zone type in the DELAY GROUP.

RELATED OPTIONS
P40E, P41E, P43E

Handover zones are delayed only if entry is made through an Entry Delay zone first. If a Handover zone is triggered first, the zone behaves as an instant zone. Normally, the "point of entry" zone should be Delay zone, with any other zones in the entry path programmed as Handover zones.

KPX+	P42E [Zone Number] E to enable zones
NAVIGATOR	P42E > Select zones
SMS*	P[MasterCode]E P[InstallerCode]E P42E [Zone Number] E

P43E — ENTRY DELAY2 ZONES

PROGRAM MODE LEVEL
Installer

FACTORY DEFAULT
All OFF: No zones have Entry Delay2.

NOTES
When a zone is selected for this type, it is automatically deselected from any other zone type in the DELAY GROUP.

RELATED OPTIONS
P40E, P41E, P42E

When an Entry Delay2 zone is triggered, it has entry delay as set by the Entry Delay Time2 (P27E).

KPX+	P43E [Zone Number] E to enable zones
NAVIGATOR	P43E > Select zones
SMS*	P[MasterCode]E P[InstallerCode]E P43E [Zone Number] E

P44E — RESET LOCKOUT ZONES

PROGRAM MODE LEVEL
Installer

FACTORY DEFAULT
All ON: All zones are Lockout zones.

NOTES
When a zone is selected for this type, it is automatically deselected from any other zone type in the DELAY GROUP.

KPX+ PRO TIP
When selecting zones, MEMORY E selects all, 0 E deselects all.

RELATED OPTIONS
P60E 4E Tamper Reset Lockout.
P78E Multiple alarm reports.

All zones and tamper input can be programmed to Lockout, i.e. cause the RESET OUTPUT to sound only once while the panel is armed.

The RESET OUTPUT is then locked out for that alarmed zone until entering a valid code has reset the panel. If using area partitioning, disarming either partition resets the zone lockout for both partitions.

KPX+	P44E [Zone Number] E to enable/disable zones
NAVIGATOR	P44E > Select zones
SMS*	P[MasterCode]E P[InstallerCode]E P44E [Zone Number]E

AREA PARTITIONING

ASSIGNING ZONES TO AREAS

Option No.	Description	ZONES 1–8 (D8 & D16) 1	2	3	4	5	6	7	8	ZONES 9–16 (D16) 9	10	11	12	13	14	15	16
P45E	AREA 1 ZONES	ON	ON	ON	ON	ON	ON	ON	ON	ON	ON	ON	ON	ON	ON	ON	ON
P46E	AREA 2 ZONES																

P45E, P46E — ASSIGNING ZONES TO AREAS

PROGRAM MODE LEVEL
Installer

FACTORY DEFAULT
All zones assigned to Area 1.
No zones assigned to Area 2.

NOTES
- Zones assigned to BOTH areas become Common zones.
- If no Area operation is required, assign all zones to Area 1. (This is also the factory default).

Assign (or remove) zones that will operate in Area 1 and/or Area 2.

KPX+	P45E [Zone Number] E to enable/disable zones for Area 1 P46E [Zone Number] E to enable/disable zones for Area 2
NAVIGATOR	P45E > Select zones (Press Next/Previous Option) P46E > Select zones (Press Next/Previous Option)
SMS*	P[MasterCode]E P[InstallerCode]E P45E [Zone Number]E P[MasterCode]E P[InstallerCode]E P46E [Zone Number]E

* SMS programming shows the full SMS string to send. KPX+ and NAVIGATOR programming assumes the panel is already in program mode.

AREA PARTITIONING

DEFINITION

Area Partitioning allows the control panel zones to be split into two partitions; Area1 and Area2. The panel then effectively operates as two separate systems sharing only the siren outputs and communicator.

COMMON AREA ZONES

Zones assigned to both Areas are armed only when Area1 and Area2 are both armed. This allows the Common Area zone/s to be shared by both Areas.

For example, Office A and Office B operate as separate areas but the entrance foyer used by both offices is assigned to both areas meaning it will automatically arm when both Areas have armed. The Common Area then automatically disarms when either Area1 or Area2 disarms.

USER CODE ASSIGNMENT

A User Code assigned to an Area can arm and disarm only that Area. User Codes assigned to both Areas will operate both Areas simultaneously.

OPERATION

Arming and disarming is carried out as normal from a single keypad or separate keypads installed in both areas or by Radio Key.

Area operation only applies to zones when they are in the armed state. This means that Day zones and 24hr zones are independent of area operations.

AREA PARTITIONING & HOME MODE

The panel can be armed in Home mode if Area2 is already armed on these conditions:

1. Area 1 must be OFF.
2. Area 2 must be armed first, and then Home armed – not the reverse.
3. Zones assigned to both Home mode (P51E) and to Area 2 (P46E) will act as Home zones when both Area 2 and Home are armed.
4. Zones must be assigned to P51E to allow Home arm.
5. User codes assigned only to Area2 can arm but **will not disarm Home Mode.**

Note: Home arming when AREA 2 is armed cannot be done by Radio Key (double OFF button) or by keyswitch.

Note: Home Mode is not available when Area 1 is armed.

HOME MODE

Home Mode allows selected zones to be armed while the system is disarmed. For example, this is often used to arm door and windows sensors overnight, while allowing free movement within the premises.

1. Home Mode will not arm if Area 1 is armed.
2. Home Mode will not arm if there are no Home zones programmed, (P51E).
3. User codes assigned only to Area2 can arm but will not disarm Home Mode.
4. Zones which are to be armed in Home Mode are selected using option P51E.
5. Home Mode can be armed by Keypad, Radio Key or Access Card.
6. Audible outputs in Home Mode (set by options P63E 1E-4E) are independent of audible outputs in fully armed mode.
7. If reporting is enabled, Home Mode alarms will be reported as normal providing that:

   a/ The zone/s are selected to report alarms by option P74E.

   b/ Options P64E 1E & 3E are off. (Brief Home Alarm, Home Entry Delay2).
8. Zones selected to be Entry Delay1 zones also have entry delay in Home Mode.
9. If Home Zones Entry Delay2 (P64E 3E) is enabled, then *all* Home zones will have entry delay as set by P27E.

TEMPORARY DAY ZONES OPERATION (KPX+ and Navigator)

The Temporary Day Zone feature allows easy and flexible Day Zone selection and operation.

While remaining in normal operating mode, the user can add and remove Temporary Day Zones and enable/disable day zone operation using simple key strokes.

TO ENABLE TEMPORARY DAY ZONES

To enable Temporary Day Zone selection and operation, the Brief Day Alarm feature (installer option P64E 2E) must be ON. If P64E 2E is OFF, the Temporary Day Zone feature will be unavailable but Permanent Day Zones will still operate and will sound the programmed output while the zone is unsealed.

P64E 2E is OFF by default.

USER COMMANDS (In normal Operating Mode).

(P) + (E) Selection Mode. Enter **P** followed by **E** when in operating mode to enter Temporary Day Zone selection mode.

[Zone No.] + (E) Zone Selection. To select or deselect zones to be Temporary Day Zones. The selected zones are indicated by the corresponding zone number.

Permanent Day Zones, (set by installer option P53E), are not displayed in selection mode. Permanent Day Zones can be selected as Temporary Day Zones but this has no effect as those zones are already day zones.

(E) Saves changes and returns to normal operating mode.

(0) + (E) Enables and Disables Day Mode. This enables/disables both Temporary and Permanent Day Zones.

INDICATION

The Home icon flashes continuously when Temporary Day Mode is enabled.

OPERATION

When Day Mode is enabled, any unsealed day zone will sound the programmed output for 2 seconds. When Day Mode is disabled, an unsealed day zone will simply be indicated on the keypad as an unsealed zone.

KPX CHIME

The KPX keypad has a special two tone chime which can be enabled in place of the default beep warning tone. See P126E 4E.

AUX 2 OPTION

When the Temporary Day Zone feature is enabled, the installer option P63E 6E selects Aux 2 output instead of the strobe output. This allows a remote warning device such as a buzzer to be connected for day zone warning. This may be needed if an additional audible day zone warning is needed, although the keypad sonalert, (P63E 7E), is more than adequate in most cases.

RELATED OPTIONS

P64E 2E, Brief Day Alarm. Turn this option on to enable Temporary Day Zones. Factory default = OFF.

P63E 5E, Day Mode to Reset output.

P63E 6E, Day Mode to Strobe output.

If P64E 2E is ON, then this option sends day alarms to the AUX 2 output.

P63E 7E, Day Mode to Sonalert.

P63E 8E, Day Mode to Siren output.

P53E, Permanent Day Zone selection.

P126E 4E, Enable KPX Chime in Day Mode

ⓘ Temporary Day Zone selections will be lost if the panel is powered down or reset, but are not affected by arming/disarming or entering program mode.

P51E — HOME ZONES

PROGRAM MODE LEVEL
Installer

FACTORY DEFAULT
all OFF: No Home zones.

NOTES
By default, all Home zones have Entry Delay2, see P64E 3E. If this option is off Home zones have normal entry delay attributes set by options P40E–P42E.

RELATED OPTIONS
P63E Home Mode output mapping.
P64E 1E Brief Home alarm.
P64E 3E Home zones have Entry Delay2.
P69E 3E Quiet Home siren.
P69E 5E Radio Key ON or OFF button arms Home Mode.
P120E 2E Home arm chirps by radio key.
P120E 3E Radio Key AUX button arms Home mode.
P120E 6E Smart Beeps for Home and Day zones.

Home zones allow you to Arm selected zones while others are ignored. Typically used for perimeter zones such as windows and doors while you are at home.

For example: upstairs zones are Disarmed while downstairs zones are Armed in Home mode.

KPX+	P51E [Zone Number] E to enable/disable zones
NAVIGATOR	P51E > Select zones
SMS*	P[MasterCode]E P[InstallerCode]E P51E [Zone Number] E

NOTE: Zones selected to Report Zone Alarms (P74E) will by default report alarms in Home Mode, (if the communicator is enabled).

The Brief Home Alarm option P64E 1E, when enabled, prevents Home alarms from reporting.

See page 29 for Home Mode operation.

P52E — 24HR ZONES

PROGRAM MODE LEVEL
Installer

FACTORY DEFAULT
All OFF: No 24hr zones.

NOTES
- The Tamper input is always a 24hr zone.
- For silent 24hr zones, deselect the zone/s from options P54E-P57E (Reset, Strobe, Sonalert & Siren).
- To change a 24hr zone to any other zone type, the zone must also be re-assigned to an AREA (P45E or P46E).

24hr Zones operate at all times regardless of the mode of panel operation, i.e. Armed, Disarmed or Home Monitor. When alarmed, these zones will activate assigned outputs immediately. To reset those alarms a valid user code must be entered.

Selecting a zone as 24hr will override any other zone type setting such as Instant, Delayed or Handover. 24hr zones are independent of Area operation. All other zone types must be assigned to at least one Area to become active.

KPX+	P52E [Zone Number] E to enable/disable zones
NAVIGATOR	P52E > Select zones
SMS*	P[MasterCode]E P[InstallerCode]E P52E [Zone Number] E

P53E — DAY ZONES

PROGRAM MODE LEVEL
Installer

FACTORY DEFAULT
All OFF: No Day zones.

NOTES
Typical uses For Day Zones, Instant alert when a delivery door is opened, doorway alert for a shop.

RELATED OPTIONS
P63E 5E-8E Day zone output mapping.
P64E 2E Brief Day Mode alarm.
P120E 6E Smart Beeps for Home and Day zones.

Day Zones operate when the panel is fully disarmed, i.e. when Area 1, Area 2 and Home are all off. When alarmed, these zones will activate their assigned outputs instantly.

The outputs mapped to the Day Zone will turn on while the zone is unsealed. Turn P64E 2E on, to limit Day Zone alarms to 2 seconds.

Also see Temporary Day Zones feature (page 29) which allows day mode to be easily enabled/disabled and day zones added/removed by the user from any keypad.

KPX+	P53E [Zone Number] E to enable/disable zones
NAVIGATOR	P53E > Select zones
SMS*	P[MasterCode]E P[InstallerCode]E P53E [Zone Number] E

See page 29 for information about TEMPORARY DAY ZONES

* SMS programming shows the full SMS string to send. KPX+ and NAVIGATOR programming assumes the panel is already in program mode.

ZONE TO OUTPUT MAPPING

When a zone alarms, it can turn on any or all outputs: Sonalert, Strobe, Siren, Reset, AUX outputs.

The programming is selected with options P54E – P59E. Simply set the zone number to the output to select it. The zone LED will indicate if the zone is selected.

The Tamper Input and the Keypad Panic can be programmed to turn on the Reset, Strobe, Sonalert and Siren by using option P61E.

Zone To Output Mapping applies to zones when the panel is in the Armed or 24hr state.

For Home and DAY mode Output Mapping – see Option P63E 1E–8E, page 37.

MAPPING ZONES TO OUTPUTS

Option No.	Description	ZONES 1–8 (D8 & D16)								ZONES 9–16 (D16)							
		1	2	3	4	5	6	7	8	9	10	11	12	13	14	15	16
P54E	RESET Zones	ON	ON	ON	ON	ON	ON	ON	ON	ON	ON	ON	ON	ON	ON	ON	ON
P55E	STROBE Zones	ON	ON	ON	ON	ON	ON	ON	ON	ON	ON	ON	ON	ON	ON	ON	ON
P56E	SONALERT Zones	ON	ON	ON	ON	ON	ON	ON	ON	ON	ON	ON	ON	ON	ON	ON	ON
P57E	SIREN Zones	ON	ON	ON	ON	ON	ON	ON	ON	ON	ON	ON	ON	ON	ON	ON	ON
P58E	AUX1,3 Zones																
P59E	AUX2,4 Zones																

P54E — RESET OUTPUT ZONES

PROGRAM MODE LEVEL
Installer

FACTORY DEFAULT
All ON: All zones trigger Reset output.

Selects the zones to trigger the Reset output.

KPX+	P54E [Zone Number] E to enable/disable zones
NAVIGATOR	P54E > Select zones
SMS*	P[MasterCode]E P[InstallerCode]E P54E [Zone Number] E

P55E — STROBE OUTPUT ZONES

PROGRAM MODE LEVEL
Installer

FACTORY DEFAULT
All ON: All zones trigger Strobe output.

Selects the zones to trigger the Strobe output.

KPX+	P55E [Zone Number] E to enable/disable zones
NAVIGATOR	P55E > Select zones
SMS*	P[MasterCode]E P[InstallerCode]E P55E [Zone Number] E

P56E — KEYPAD SONALERT ZONES

PROGRAM MODE LEVEL
Installer

FACTORY DEFAULT
All ON: All zones sound the Keypad Sonalert.

Selects the zones to trigger the Keypad Sonalert.

KPX+	P56E [Zone Number] E to enable/disable zones
NAVIGATOR	P56E > Select zones
SMS*	P[MasterCode]E P[InstallerCode]E P56E [Zone Number] E

P57E — SIREN ZONES

PROGRAM MODE LEVEL
Installer

FACTORY DEFAULT
All ON: All zones trigger Siren output

Selects the zones to trigger the Siren output.

KPX+	P57E [Zone Number] E to enable/disable zones
NAVIGATOR	P57E > Select zones
SMS*	P[MasterCode]E P[InstallerCode]E P57E [Zone Number] E

KPX+ PRO TIP

When selecting zones, **MEMORY E** selects all zones, **0 E** deselects all zones

* SMS programming shows the full SMS string to send. KPX+ and NAVIGATOR programming assumes the panel is already in program mode.

P58E — AUX1,3 OUTPUT ZONES

PROGRAM MODE LEVEL
Installer

FACTORY DEFAULT
All OFF: No zones trigger AUX 1 or 3

RELATED OPTIONS
P121E, P123E Day zone output mapping.

Selects the zones to trigger the AUX1 or AUX3 outputs. This option selects which zones trigger AUX1 or 3.

Use P121E 1E and/or P123E 1E to enable the ouput.

Once turned on by a zone alarm, the output will remain on until the panel is reset/disarmed.

KPX+	P58E [Zone Number] E to enable/disable zones
NAVIGATOR	P58E > Select zones
SMS*	P[MasterCode]E P[InstallerCode]E P58E [Zone Number] E

P59E — AUX2,4 OUTPUT ZONES

PROGRAM MODE LEVEL
Installer

FACTORY DEFAULT
All OFF: No zones trigger AUX 2 or 4

RELATED OPTIONS
P121E, P123E Day zone output mapping.

Selects the zones to trigger the AUX2 or AUX4 outputs. This option selects which zones trigger AUX2 or 4.

Use P122E 1E and/or P124E 1E to enable the ouput.

Once turned on by a zone alarm, the output will remain on until the panel is reset/disarmed.

KPX+	P59E [Zone Number] E to enable/disable zones
NAVIGATOR	P59E > Select zones
SMS*	P[MasterCode]E P[InstallerCode]E P59E [Zone Number] E

* SMS programming shows the full SMS string to send. KPX+ and NAVIGATOR programming assumes the panel is already in program mode.

Option No.		Description	Default
P60E	1E	Entry Beeps	ON
	2E	Keyswitch Home/Disarm	OFF
	3E	Keyswitch Arm/Disarm	OFF
	4E	Tamper Siren lockout	ON
	5E	Duress to RESET output	OFF
	6E	Auto Exclude zones	ON
	7E	Auto keypad display off	OFF
	8E	Delayed Aux3, Aux4 outputs	OFF

P60E 1E

ENTRY BEEPS

PROGRAM MODE LEVEL
Installer

FACTORY DEFAULT
Entry Beeps ON.

RELATED OPTIONS
P69E 7E Arm Exit Beeps.
P69E 8E Home Exit Beeps.

The sonalert will beep during Entry Delay.

KPX+	P60E 1E to enable/disable the option
NAVIGATOR	P60E > enable/disable option 1E
SMS*	P[MasterCode]E P[InstallerCode]E P60E 1E

P60E 2E, 3E

KEYSWITCH OPERATION

PROGRAM MODE LEVEL
Installer

FACTORY DEFAULT
Keyswitch disabled.

NOTES
The keyswitch:
a/ Always Arms Area1 only.
b/ Does not arm Area2.
c/ Can disarm Area2 if option P120E 8E is enabled.
• Use a 2K2 resistor on the keyswitch input regardless of the global EOL resistor value set by P129E. Also see P129E, page 73.
• Short the resistor to arm and disarm. Open circuit to trigger Panic alarm.

RELATED OPTIONS
P120E 1E Latched Keyswitch.
P120E 4E Keyswitch Disarms only.
P120E 5E Keyswitch Arms only.
P120E 8E Keyswitch disarm Area2.
P129E EOL Resistor value

An externally fitted, normally open momentary Keyswitch can be used to Arm, Disarm or arm the Home mode.

The keyswitch is wired to zone 8 (zone 8 is then no longer available as a normal alarm input, but is still available for use as a Radio Zone).

2E & 3E OFF: No keyswitch operation. Zone 8 is a normal alarm input.
2E ON: Keyswitch cycles between Home and Disarm.
3E ON: Keyswitch cycles between Arm and Disarm.
2E & 3E ON: Keyswitch cycles between Arm, Home and Disarm.

KPX+	P60E enable/disable 2E 3E as required
NAVIGATOR	P60E > enable/disable 2E 3E as required
SMS*	P[MasterCode]E P[InstallerCode]E P60E 2E 3E as required

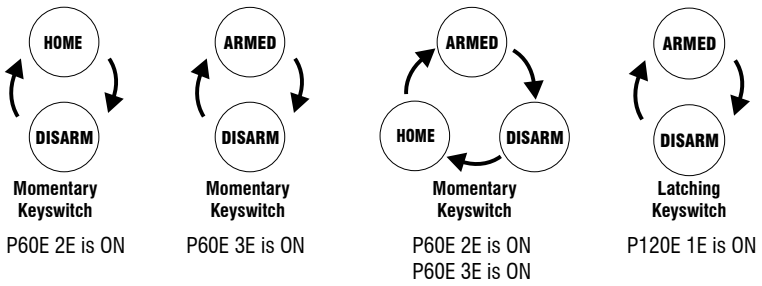

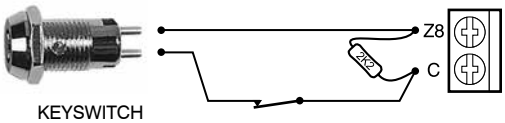

KEYSWITCH
N/O contacts

Optional PANIC BUTTON.
N/C contacts in series.

KEYSWITCH WIRING.

A momentary or latching keyswitch can be wired as shown.

Always use a 2K2 resistor regardless of the global EOL resistor value set by P129E

* SMS programming shows the full SMS string to send. KPX+ and NAVIGATOR programming assumes the panel is already in program mode.

P60E 4E — TAMPER SIREN LOCKOUT

PROGRAM MODE LEVEL
Installer

FACTORY DEFAULT
ON Tamper Reset Lockout enabled.

RELATED OPTIONS
P44E Lockout zones.

This option programs the Tamper input to Lockout, i.e. cause the Siren & Reset outputs to sound only once while the panel is armed.

KPX+	P60E 4E to enable/disable the option
NAVIGATOR	P60E > enable/disable 4E
SMS*	P[MasterCode]E P[InstallerCode]E P60E 4E

P60E 5E — DURESS TO RESET OUTPUT

PROGRAM MODE LEVEL
Installer

FACTORY DEFAULT
OFF No Reset output on Duress alarm.

RELATED OPTIONS
P75E 1E Enable reporting of Duress.

Keypad Duress is normally a silent alarm. This option makes the Duress alarm trigger the Reset output. To Disarm with Duress, add any of the digits 5,6,8 or 9 in front of the user code when Disarming.

KPX+	P60E 5E to enable/disable the option
NAVIGATOR	P60E > enable/disable 5E
SMS*	P[MasterCode]E P[InstallerCode]E P60E 5E

P60E 6E — AUTO EXCLUDE ZONES

PROGRAM MODE LEVEL
Installer

FACTORY DEFAULT
ON Auto Exclude enabled.

RELATED OPTIONS
P62E 7E Siren burst on Auto Exclude.

If a zone is unsealed at the end of Exit Time the panel can either Exclude (ignore) that zone or immediately alarm.

The panel will give a 2 second Siren burst at the end of Exit Time to indicate that the panel is armed with a zone/s Auto Excluded. The 2 sec Siren burst can be disabled by option P62E 7E.

KPX+	P60E 6E to enable/disable the option
NAVIGATOR	P60E > enable/disable 6E
SMS*	P[MasterCode]E P[InstallerCode]E P60E 6E

P60E 7E — DISABLE KEYPAD DISPLAY

PROGRAM MODE LEVEL
Installer

FACTORY DEFAULT
OFF: Display is always ON.

NOTES
- LCD KEYPADS: The LCD display and keys backlighting will turn off.
- NAVIGATOR KEYPAD: The touch screen display will go blank. Touch to restore.

Keypad displays can be programmed to blank after 4 minutes of no keypad use. Any action that causes a beep will restore the display. (LCD keypads, use the (E) button preferably. Navigator Touch Screen Keypad, touch to restore the display).

KPX+	P60E 7E to enable/disable the option
NAVIGATOR	P60E > enable/disable 7E
SMS*	P[MasterCode]E P[InstallerCode]E P60E 7E

P60E 8E — DELAYED AUX3 & AUX4 OUTPUTS

PROGRAM MODE LEVEL
Installer

FACTORY DEFAULT
OFF: AUX3 & AUX4 outputs are instant.

RELATED OPTIONS
P143E 1E, AUX3 on when Area1 arms.
P143E 2E, AUX3 on when Area2 arms.
P144E 1E, AUX4 on when Area1 arms.
P144E 2E, AUX4 on when Area2 arms.

The AUX3 and AUX4 outputs can be programmed to turn on when Areas 1 and 2 are armed. These outputs can be programmed to turn on instantly or at the end of Exit Time.

This option only applies when AUX3 and AUX4 outputs are enabled as Arm1 and Arm2 outputs, (P143E 1E on and P144E 1E on).

KPX+	P60E 8E to enable/disable the option
NAVIGATOR	P60E > enable/disable 8E
SMS*	P[MasterCode]E P[InstallerCode]E P60E 8E

* SMS programming shows the full SMS string to send. KPX+ and NAVIGATOR programming assumes the panel is already in program mode.

Option No.		Description	Default
P61E	1E	Tamper to RESET output	ON
	2E	Tamper to STROBE output	ON
	3E	Tamper to Keypad Sonalert	ON
	4E	Tamper to SIREN output	ON
	5E	Keypad Panic to RESET output	ON
	6E	Keypad Panic to STROBE output	ON
	7E	Keypad Panic to Sonalert	ON
	8E	Keypad Panic to SIREN output	ON

P61E 1E–4E

TAMPER ALARM / OUTPUT MAPPING

PROGRAM MODE LEVEL
Installer

FACTORY DEFAULT
1E–4E, ON: Tamper alarm triggers all outputs.

NOTES
- A Tamper Alarm can be caused by the TAMP input or by removing the J1 PROG/TAMP link on the main board.

This option selects which outputs will trigger when a Tamper Alarm occurs.

1E ON: Tamper Alarm to Reset output
2E ON: Tamper Alarm to Strobe output
3E ON: Tamper Alarm to Keypad Sonalert output
4E ON: Tamper Alarm to Siren output

KPX+	P61E enable/disable 1E ~ 4E as required
NAVIGATOR	P61E > enable/disable 1E ~ 4E as required
SMS*	P[MasterCode]E P[InstallerCode]E P61E 1E ~ 4E as required

P61E 5E–8E

KEYPAD PANIC ALARM / OUTPUT MAPPING

PROGRAM MODE LEVEL
Installer

FACTORY DEFAULT
5E–8E, ON: Panic alarm triggers all outputs.

NOTES
- A Keypad Panic Alarm can be caused by the PANIC keys on the keypad (* E or ** together, depending on Option P126E1E).

This option selects which outputs will trigger when a Keypad Panic alarm occurs.

5E ON: Keypad Panic Alarm to Reset output
6E ON: Keypad Panic Alarm to Strobe output
7E ON: Keypad Panic Alarm to Keypad Sonalert output
8E ON: Keypad Panic Alarm to Siren output

KPX+	P61E enable/disable 5E ~ 8E as required
NAVIGATOR	P61E > enable/disable 5E ~ 8E as required
SMS*	P[MasterCode]E P[InstallerCode]E P61E 5E ~ 8E as required

* SMS programming shows the full SMS string to send. KPX+ and NAVIGATOR programming assumes the panel is already in program mode.

Option No.		Description	Default
P62E	1E	Shortcut Memory display	ON
	2E	Shortcut Zone Exclude	ON
	3E	Shortcut Home Mode	ON
	4E	Shortcut Keypad Panic	OFF
	5E	S hortcut Area1 Arming	ON
	6E	Shortcut Area2 Arming	OFF
	7E	Brief warning on Auto Exclude	ON
	8E	Exit Time x10	OFF

P62E 1E–6E

SYSTEM OPERATION SHORTCUTS

PROGRAM MODE LEVEL
Installer

FACTORY DEFAULT
1E ON: Memory Display shortcut enabled
2E ON: Zone Exclude shortcut enabled
3E ON: Home Mode shortcut enabled
4E OFF: Keypad Panic shortcut disabled
5E ON: Area1 Arming shortcut enabled
6E OFF: Area2 Arming shortcut disabled

NOTES
If either Area1 or Area2 are armed by shortcut and no user codes are assigned to that Area then it will always remain armed. You will then need to enter program mode on power-up and assign codes to Areas.

RELATED OPTIONS
P126E 1E, 2E, 3E double key keypad functions

Some keypad operations can be programmed to operate with or without a User Code.

1E ON: Memory Display shortcut
2E ON: Zone Exclude shortcut
3E ON: Home Mode shortcut
4E ON: Keypad Panic shortcut
5E ON: Area1 Arming shortcut
6E ON: Area2 Arming shortcut

KPX+	P62E enable/disable 1E ~ 6E as required
NAVIGATOR	P62E > enable/disable 1E ~ 6E as required
SMS*	P[MasterCode]E P[InstallerCode]E P62E 1E ~ 6E as required

OPERATING EXAMPLES:
KPX+ & NAVIGATOR Arming without shortcut: ARM [User Code] E
KPX+ & NAVIGATOR Arming with shortcut: ARM E
KPX+ Keypad Panic without shortcut: * [User Code] E
NAVIGATOR Keypad Panic without shortcut: EMERGENCY > PANIC > [User Code] E
KPX+ Keypad Panic with shortcut: * E
NAVIGATOR Keypad Panic with shortcut: EMERGENCY > PANIC

P62E 7E

SIREN BURST ON AUTO EXCLUDE

PROGRAM MODE LEVEL
Installer

FACTORY DEFAULT
ON: Siren burst on Auto Exclude enabled.

RELATED OPTIONS
P60E 6E Auto Exclude zones.

This option allows the disabling of the 2 second siren burst at the end of Exit Time which indicates a zone/s has been Auto Excluded.

KPX+	P62E 7E to enable/disable the option
NAVIGATOR	P62E > enable/disable 7E
SMS*	P[MasterCode]E P[InstallerCode]E P62E 7E

P62E 8E

EXIT TIME X10

PROGRAM MODE LEVEL
Installer

FACTORY DEFAULT
OFF: Exit Time x10 disabled.

RELATED OPTIONS
P28E Exit Time.

This option multiplies the normal exit time by a factor of 10.

KPX+	P62E 8E to enable/disable the option
NAVIGATOR	P62E > enable/disable 8E
SMS*	P[MasterCode]E P[InstallerCode]E P62E 8E

* SMS programming shows the full SMS string to send. KPX+ and NAVIGATOR programming assumes the panel is already in program mode.

Option No.		Description	Default
P63E	1E	Home Mode alarms to RESET output	ON
	2E	Home Mode alarms to STROBE	ON
	3E	Home Mode alarms to SONALERT	ON
	4E	Home Mode alarms to SIREN	OFF
	5E	Day Mode to RESET output	OFF
	6E	Day Mode to STROBE	OFF
	7E	Day Mode to keypad SONALERT	ON
	8E	Day Mode to SIREN	OFF

P63E 1E–4E — HOME MODE OUTPUT MAPPING

PROGRAM MODE LEVEL
Installer

FACTORY DEFAULT
1E, 2E, 3E ON.
4E OFF.

RELATED OPTIONS
P64E 1E Brief Home alarm.

This option selects which outputs are triggered by alarms in Home Mode.

1E ON: Home Mode to Reset output
2E ON: Home Mode to Strobe output
3E ON: Home Mode to Keypad Sonalert output
4E ON: Home Mode to Siren output

KPX+	P63E enable/disable 1E ~ 4E as required
NAVIGATOR	P63E > enable/disable 1E ~ 4E as required
SMS*	P[MasterCode]E P[InstallerCode]E P63E 1E ~ 4E as required

P63E 5E–8E — DAY MODE OUTPUT MAPPING

PROGRAM MODE LEVEL
Installer

FACTORY DEFAULT
7E ON.
5E, 6E, 8E OFF

RELATED OPTIONS
P64E 2E Brief Day alarm.

For ZONE TO OUTPUT MAPPING for Armed & 24hr states – see options P54E – P59E, page 31

This option selects which outputs are triggered by alarms in Day Mode.

5E ON: Day Mode to Reset output
6E ON: Day Mode to Strobe output, (If Brief Day Alarm is enabled, (P64E 2E), then this option sends day alarms to the AUX2 output).
7E ON: Day Mode to Keypad Sonalert output
8E ON: Day Mode to Siren output

KPX+	P63E enable/disable 5E ~ 8E as required
NAVIGATOR	P63E > enable/disable 5E ~ 8E as required
SMS*	P[MasterCode]E P[InstallerCode]E P63E 5E ~ 8E as required

Option No.		Description	Default
P64E	1E	Brief Home Alarm	OFF
	2E	Brief Day Alarm	OFF
	3E	Home zones Entry Delay2	ON
	4E	Radio Key SIREN CHIRPS	OFF
	5E	[not used]	OFF
	6E	Strobe Flash on Home arm by radio	OFF
	7E	[not used]	OFF
	8E	[not used]	OFF

P64E 1E — BRIEF HOME MODE ALARM

PROGRAM MODE LEVEL
Installer

FACTORY DEFAULT
OFF: Brief Home Alarm disabled.

RELATED OPTIONS
P51E Set Home zones.
P63E 1E–4E Home Mode output mapping

Alarms in Home Mode can either activate the programmed outputs for Siren Time duration (P29E) or they can activate the outputs for 2 seconds only.

NOTE: If Brief Home alarm is enabled, then Home alarms will not be reported by communicator.

KPX+	P64E 1E to enable/disable the option
NAVIGATOR	P64E > enable/disable 1E
SMS*	P[MasterCode]E P[InstallerCode]E P64E 1E

* SMS programming shows the full SMS string to send. KPX+ and NAVIGATOR programming assumes the panel is already in program mode.

P64E 2E

BRIEF DAY ALARM & ENABLE TEMPORARY DAY ZONES

PROGRAM MODE LEVEL
Installer

FACTORY DEFAULT
OFF: Brief Day Alarm disabled.

RELATED OPTIONS
P53E Assign Day zones.
P63E 5E–8E Day Mode output mapping.

Alarms in Day Mode will activate the programmed outputs while the zone is unsealed or they can activate the outputs for 2 seconds only.

This option also enables the TEMPORARY DAY ZONE feature. See page 29.

KPX+	P64E 2E to enable/disable the option
NAVIGATOR	P64E > enable/disable 2E
SMS*	P[MasterCode]E P[InstallerCode]E P64E 2E

P64E 3E

HOME ZONES ENTRY DELAY 2

PROGRAM MODE LEVEL
Installer

FACTORY DEFAULT
ON: Home zones all have Entry Delay2.

RELATED OPTIONS
P27E Entry Delay Time 2.
P51E Assign Home zones.
P63E 1E–4E Home Mode output mapping.

Home zones can either have the delay types set by options P40E–P43E or they can all be assigned to have Entry Delay 2. This allows all Home zones to be programmed with the same entry delay time.

KPX+	P64E 3E to enable/disable the option
NAVIGATOR	P64E > enable/disable 3E
SMS*	P[MasterCode]E P[InstallerCode]E P64E 3E

P64E 4E

ARM/DISARM CHIRPS

PROGRAM MODE LEVEL
Installer

FACTORY DEFAULT
OFF: No siren chirps.

RELATED OPTIONS
P68E 8E Quiet Chirps.
P69E 5E Home Arm by Radio Key.
P120E 2E Home Arm chirps.
P120E 3E Radio Key AUX button arms Home Mode.

If this option is selected the Siren output will "Chirp" when the panel is armed and disarmed with the Keyswitch input, prox cards or Radio Keys. This option applies to *siren chirps*, the *strobe* output always flashes when arming/disarming by the above methods. (Home arming chirps are enabled separately by option P120E 2E).

The siren output will make 1 Chirp on Arming, and 3 Chirps on Disarming.

KPX+	P64E 4E to enable/disable the option
NAVIGATOR	P64E > enable/disable 4E
SMS*	P[MasterCode]E P[InstallerCode]E P64E 4E

P64E 6E

STROBE FLASH ON HOME ARMING BY RADIO

PROGRAM MODE LEVEL
Installer

FACTORY DEFAULT
OFF: No strobe.

NOTES
This is not related to strobe flash on arming and disarming area 1 or 2 by radio key, which always flashes the strobe on arm and disarm.

RELATED OPTIONS
P69E 5E Home Mode arming by radio key.
P120E 2E Siren Chirp on Home Arming by Radio

This option enables a brief strobe flash when arming Home Mode by radio key or radio keypad. This applies to Home Mode arming only, disarming Home Mode by radio key never flashes the strobe.

KPX+	P64E 6E to enable/disable the option
NAVIGATOR	P64E > enable/disable 6E
SMS*	P[MasterCode]E P[InstallerCode]E P64E 6E

* SMS programming shows the full SMS string to send. KPX+ and NAVIGATOR programming assumes the panel is already in program mode.

Option No.	Description	ZONES 1–8 (D8 & D16)								ZONES 9–16 (D16)							
		1	2	3	4	5	6	7	8	9	10	11	12	13	14	15	16
P65E	SUPERVISED ZONES																

P65E

PROGRAM MODE LEVEL
Installer

FACTORY DEFAULT
all OFF: No Supervision zones.

NOTES
If Radio Supervision is enabled, P66E 5E off, then the supervision feature cannot be used as an inactivity monitor.

RELATED OPTIONS
P66E 1E–4E Supervision Alerts.
P66E 5E Wired Zone Supervision.
P67E Zone Supervision Time.
P92E 4E (D8) Report Supervision.
P75E 12E (D16) Report Supervision.

KPX+ PRO TIP

When selecting zones, **MEMORY E** selects all zones, **0 E** deselects all zones

SUPERVISED ZONES

Any zone 1-8 or 1-16 can be a Supervised Zone.

Supervision for HARDWIRED ZONES

In operation, a Supervised Zone is subject to the Supervision Time (P67E). If the zone/s has not sealed or unsealed during the Supervision Time, then the programmed alerts will turn on (as programmed by P66E 1E-4E, P92E 4E or P75E 12E). Zone Supervision can be used as an "inactivity monitor" to sound an alert or send a comms report if a zone has had no activity during a set period of time. (For example, to monitor an aged person's home).

- A zone which is permanently in a sealed or unsealed state for the duration of Supervision Time will be treated as a Supervision alarm.
- If P66E 5E is on, Zone Supervision acts on wired zones. If P66E 5E is off, Zone Supervision acts on radio zones.
- Each Supervised zone has its own supervision timer.
- Zone Supervision is independent of the armed state of the panel.
- Zone Supervision can be temporarily disabled by Excluding the zone/s.
- The zone which caused the Supervision alarm flashes on the keypad. Entering a valid code + E will reset Supervision alarms.

Supervision for RADIO ZONES

The purpose of Radio Supervision is to verify the correct operation of Ness Radio PIRs. The Supervision signal from the Radio PIR tells the panel that the device has not been removed from radio range and is in working order.

A non-SUPERVISION enabled Radio PIR will transmit signals to the panel only when it has detected an event. Obviously, there is no guaranteed signal period.

In either case, when the allowed time limit is exceeded then a WARNING is first given (if programmed by P66E 3E), and then after 1 minute, the programmed RADIO SUPERVISION ALERTS are generated by the panel.

P66E 5E must be off for supervision to work on radio zones.

KPX+	P65E [Zone Number] E to enable/disable zones
NAVIGATOR	P65E > Select zones
SMS*	P[MasterCode]E P[InstallerCode]E P65E [Zone Number] E

RADIO SUPERVISION OPERATION

The purpose of Radio Supervision is to verify the correct operation of Ness Radio PIRs. The Supervision signal from the Radio PIR tells the panel that the device has not been removed from radio range and is in working order.

A non-SUPERVISION enabled Radio PIR will transmit signals to the panel only when it has detected an event. Obviously, there is no guaranteed signal period.

In either case, when the allowed time limit is exceeded then a WARNING is first given (if programmed by P66E 3E), and then after 1 minute, the programmed RADIO SUPERVISION ALERTS are generated by the panel.

* SMS programming shows the full SMS string to send. KPX+ and NAVIGATOR programming assumes the panel is already in program mode.

Option No.		Description	Default
P66E	1E	Zone Supervision alarm to RESET output	OFF
	2E	Zone Supervision alarm to STROBE	OFF
	3E	Zone Supervision alarm to SONALERT	OFF
	4E	Zone Supervision alarm to SIREN	OFF
	5E	Enable WIRED ZONE supervision	OFF
	6E		OFF
	7E	Zone Supervision speedup x 6	OFF
	8E	Zone Supervision speedup x10	OFF

P66E 1E — ZONE SUPERVISION ALERTS – RESET OUTPUT

PROGRAM MODE LEVEL
Installer

FACTORY DEFAULT
OFF: Supervision Reset output disabled.

RELATED OPTIONS
P65E Supervised Zones.

Setting this option turns the Reset output ON when a SUPERVISED ZONE alert occurs. The Reset output will remain ON for the duration of the ALARM TIME (Set by Option P29E).

KPX+	P66E 1E to enable/disable the option
NAVIGATOR	P66E > enable/disable 1E
SMS*	P[MasterCode]E P[InstallerCode]E P66E 1E

P66E 2E — ZONE SUPERVISION ALERTS – STROBE OUTPUT

PROGRAM MODE LEVEL
Installer

FACTORY DEFAULT
OFF: Supervision Strobe output disabled.

RELATED OPTIONS
P65E Supervised Zones.

Setting this option turns the Strobe output ON when a SUPERVISED ZONE alert occurs. The Strobe output will remain ON until the panel is disarmed.

KPX+	P66E 2E to enable/disable the option
NAVIGATOR	P66E > enable/disable 2E
SMS*	P[MasterCode]E P[InstallerCode]E P66E 2E

P66E 3E — ZONE SUPERVISION ALERTS – KEYPAD SONALERT

PROGRAM MODE LEVEL
Installer

FACTORY DEFAULT
OFF: Supervision Keypad Sonalert disabled.

NOTES
When this option is turned ON, it delays the operation of all other selected Supervision outputs by one minute.

RELATED OPTIONS
P65E Supervised Zones.

Setting this option turns the Keypad Sonalert ON when a SUPERVISED ZONE alert occurs. The Keypad Sonalert remains ON until *any* keypad key is pressed.

Also, turning this option ON makes all Supervision outputs delayed by one minute.

KPX+	P66E 3E to enable/disable the option
NAVIGATOR	P66E > enable/disable 3E
SMS*	P[MasterCode]E P[InstallerCode]E P66E 3E

P66E 4E — ZONE SUPERVISION ALERTS – SIREN OUTPUT

PROGRAM MODE LEVEL
Installer

FACTORY DEFAULT
OFF: Supervision Siren output disabled.

RELATED OPTIONS
P65E Supervised Zones.

Setting this option turns the Siren output ON when a SUPERVISED ZONE alert occurs. The Siren output will remain ON for the duration of the ALARM TIME (Set by Option P29E).

KPX+	P66E 4E to enable/disable the option
NAVIGATOR	P66E > enable/disable 4E
SMS*	P[MasterCode]E P[InstallerCode]E P66E 4E

* SMS programming shows the full SMS string to send. KPX+ and NAVIGATOR programming assumes the panel is already in program mode.

P66E 5E — ENABLE WIRED ZONE SUPERVISION

PROGRAM MODE LEVEL
Installer

FACTORY DEFAULT
OFF: Radio Zone Supervision enabled.

RELATED OPTIONS
P65E Supervised Zones.
P66E 1E–4E Supervision Alerts.
P66E 5E Wired Zone Supervision.
P67E Zone Supervision Time.
P92E 4E (D8) Report Supervision.
P75E 12E (D16) Report Supervision.

This option enables Wired Zone Supervision or Radio Zone Supervision.

Option OFF: Radio Zone Supervision is enabled

Option ON: Wired Zone Supervision is enabled

KPX+	P66E 5E to enable/disable the option
NAVIGATOR	P66E > enable/disable 5E
SMS*	P[MasterCode]E P[InstallerCode]E P66E 5E

P66E 7E — SUPERVISION TIME SPEEDUP X6

PROGRAM MODE LEVEL
Installer

FACTORY DEFAULT
OFF: Supervision Time normal.

RELATED OPTIONS
P67E Supervision Time.
P66E 8E Supervision Time speedup x10.

Enable this this option to speed up the Supervision Time by 6. For instance if P67E is set to 1 hour (60 minutes), then this option will reduce it to 10 minutes. (i.e., 60 divided by 6).

KPX+	P66E 7E to enable/disable the option
NAVIGATOR	P66E > enable/disable 7E
SMS*	P[MasterCode]E P[InstallerCode]E P66E 7E

P66E 8E — SUPERVISION TIME SPEEDUP X10

PROGRAM MODE LEVEL
Installer

FACTORY DEFAULT
OFF: Supervision Time normal.

RELATED OPTIONS
P67E Supervision Time.
P66E 7E Supervision Time speedup x6.

Enable this option to speed up the Supervision Time by 10. For instance if P67E is set to 1 hour (60 minutes), then this option will reduce it to 6 minutes. (i.e., 60 divided by 10).

KPX+	P66E 8E to enable/disable the option
NAVIGATOR	P66E > enable/disable 8E
SMS*	P[MasterCode]E P[InstallerCode]E P66E 8E

NOTE: If P66E 7E and 8E are both ON then the Supervision time is sped up by 60.
For instance if P67E is set to 1 hour (60 minutes), then this option will reduce it to 1 minute. (i.e., 60 divided by 60).

P67E — SUPERVISION TIME

PROGRAM MODE LEVEL
User, Installer

FACTORY DEFAULT
24 hours or 24 minutes.

NOTES
- Supervision time for wired or wireless zones must be 2 minutes or greater for correct operation.
- A setting of less than 3 hours for radio supervision is not recommended.
- The Supervision timer is reset on exit from Installer Program Mode and on Arm or Disarm.

RELATED OPTIONS
P65E Supervised Zones.
P66E 1E–4E Supervision Alerts.
P66E 7E–8E Supervision Time Speed-up.

SUPERVISION TIME sets the time interval before an inactive Supervised Zone triggers a Supervision alarm.

The SUPERVISION TIME setting is from 01 to 24 hours.

For timing up to 24 minutes, set P66E 7E & 8E on.
For timing up to 24 hours, set P66E 7E & 8E off.

KPX+	P67E [New Time] E
NAVIGATOR	P67E > Enter new time
SMS*	P[MasterCode]E P67E [NewTime]E

* SMS programming shows the full SMS string to send. KPX+ and NAVIGATOR programming assumes the panel is already in program mode.

Option No.		Description	Default
P68E	1E	Double Press Radio Panic	OFF
	2E	Auto Re-Arm	OFF
	3E	Long Radio Message	ON
	4E	"OK/READY" Display	OFF
	5E	Radio Arming “unsealed” warning	OFF
	6E	24hr Zone Fire Siren sound	OFF
	7E	Single Shot strobe on Arm by R/Key	OFF
	8E	Quiet chirps on radio Arm/Disarm	OFF

P68E 1E — DOUBLE PRESS RADIO PANIC

PROGRAM MODE LEVEL
Installer

FACTORY DEFAULT
OFF: Single Press Radio Panic.

Setting this option ON enables Double Press Panic for Ness Radio Keys, if fitted. The panel will look for two radio Panic signals in a row to sound the Panic alarm.

OPERATION. On the Radio Key, press and hold Panic until the transmit LED turns on. Wait until the LED turns off then release the Panic button and immediately press and hold again until the transmit LED turns on a second time.

This requirement meets regulations in some states of Australia.

KPX+	P68E 1E to enable/disable the option
NAVIGATOR	P68E > enable/disable 1E
SMS*	P[MasterCode]E P[InstallerCode]E P68E 1E

P68E 2E — AUTO RE-ARM

PROGRAM MODE LEVEL
Installer

FACTORY DEFAULT
OFF: Auto Re-Arm disabled.

NOTES
• Auto re-arm will not take place if the panel is disarmed during the exit delay time. This allows you to disarm immediately if you change your mind about leaving the premises.
• Auto re-arm operates independently on both Areas 1 and 2.

RELATED OPTIONS
P26E Entry Delay Time1 sets the "time before re-arming".
For example, say P26E is 30sec, if you disarm the panel and do not enter the premises, then the panel will Auto Re-arm in 30 seconds.

When this option is enabled, Auto Re-Arm checks that you have entered the premises after disarming.

After disarming, the panel will wait for the duration set for Entry Delay. If all zones remain sealed the panel will re-arm. This is most useful when used with radio keys where the OFF button might be accidentally pressed after you have armed and are leaving the premises.

KPX+	P68E 2E to enable/disable the option
NAVIGATOR	P68E > enable/disable 2E
SMS*	P[MasterCode]E P[InstallerCode]E P68E 2E

P68E 3E — LONG RADIO MESSAGE

PROGRAM MODE LEVEL
Installer

FACTORY DEFAULT
ON: Long Radio Message.

NOTES
Some models of Ness detectors and radio keys without encryption will not work with this setting on.

If a radio device is not recognised when you try to enrol it on this control panel, turn this option off then attempt to enrol the radio device.

Setting this option ON enables Long Radio Message for Radio Keys and Radio Devices. Radio detectors will now need the encryption link turned on. Enabling Long Radio Message gives greater protection against coding clashes with third party radio signals.

KPX+	P68E 3E to enable/disable the option
NAVIGATOR	P68E > enable/disable 3E
SMS*	P[MasterCode]E P[InstallerCode]E P68E 3E

* SMS programming shows the full SMS string to send. KPX+ and NAVIGATOR programming assumes the panel is already in program mode.

P68E 4E — "OK/READY" DISPLAY OPTION

PROGRAM MODE LEVEL
Installer

FACTORY DEFAULT
OFF: OK/READY ignores delay zones.

When the option is OFF, the OK/READY icon will display even if Entry Delay zones are unsealed. This is useful in cases where the keypad location is covered by a PIR with entry delay.

When this option is ON, all zones including Entry Delay zones must be sealed for the keypad/s to display the OK/READY icon.

KPX+	P68E 4E to enable/disable the option
NAVIGATOR	P68E > enable/disable 4E
SMS*	P[MasterCode]E P[InstallerCode]E P68E 4E

P68E 5E — RADIO KEY ARMING, UNSEALED ZONE WARNING

PROGRAM MODE LEVEL
Installer

FACTORY DEFAULT
OFF: Radio Key siren warning disabled.

Setting this option ON allows a 2 second SIREN warning if there is an unsealed zone in an Area Armed by a Radio Key.

KPX+	P68E 5E to enable/disable the option
NAVIGATOR	P68E > enable/disable 5E
SMS*	P[MasterCode]E P[InstallerCode]E P68E 5E

P68E 6E — 24HR ZONE FIRE SIREN SOUND

PROGRAM MODE LEVEL
Installer

FACTORY DEFAULT
OFF: No 24hr Fire siren sound.

This option changes the siren sound when a 24hr zone is triggered. The keypad key sequence for FIRE (3 E) always outputs the FIRE siren sound.

KPX+	P68E 6E to enable/disable the option
NAVIGATOR	P68E > enable/disable 6E
SMS*	P[MasterCode]E P[InstallerCode]E P68E 6E

P68E 7E — SINGLE SHOT STROBE ON ARMING

PROGRAM MODE LEVEL
Installer

FACTORY DEFAULT
OFF: Strobe Flash on very ARM signal.

This option provides a choice of operation for the strobe flash when arming by a Radio Key.

When this option is OFF the strobe will flash every time an ARM signal is received from a valid Radio Key. If the panel is armed any subsequent ARM signals will flash the strobe light. The panel will not change state because it already armed.

When this option is ON the strobe will flash only when the panel arms. Any subsequent ARM signals will be ignored.

KPX+	P68E 7E to enable/disable the option
NAVIGATOR	P68E > enable/disable 7E
SMS*	P[MasterCode]E P[InstallerCode]E P68E 7E

P68E 8E — QUIET CHIRPS ON ARM/DISARM

PROGRAM MODE LEVEL
Installer

FACTORY DEFAULT
OFF: Quiet Chirps disabled.

RELATED OPTIONS
P64E 4E Radio Key Chirps.
P69E 5E Home Arm by Radio Key.
P120E 2E Home Arm chirps.
P120E 3E Radio Key AUX / arms Home Mode
P162E Chirp Siren Volume

This quietens the siren chirps that are made whenever keyswitch or radio key Arming or Disarming is used.

(Arm/Disarm Chirps must be enabled at P64E 4E).

KPX+	P68E 8E to enable/disable the option
NAVIGATOR	P68E > enable/disable 8E
SMS*	P[MasterCode]E P[InstallerCode]E P68E 8E

* SMS programming shows the full SMS string to send. KPX+ and NAVIGATOR programming assumes the panel is already in program mode.

Option No.		Description	Default
P69E	1E	Flash strobe on medical alert	OFF
	2E	[not used]	OFF
	3E	Quiet Home Siren	OFF
	4E	6 beeps on Arming	OFF
	5E	Home arm by radio key ON/OFF	OFF
	6E	Disable Mains Fail Alarm	OFF
	7E	Exit BEEPS - Full Arm	OFF
	8E	Exit BEEPS - Home Mode	OFF

P69E 1E — FLASH STROBE ON MEDICAL ALARM

PROGRAM MODE LEVEL
Installer

FACTORY DEFAULT
OFF

This option enables the strobe output when a medical alarm is triggered. This is to make the house visible to the ambulance. The strobe will reset after 72 hours or when a valid code is entered.

KPX+	P69E 1E to enable/disable the option
NAVIGATOR	P69E > enable/disable 1E
SMS*	P[MasterCode]E P[InstallerCode]E P69E 1E

P69E 3E — QUIET HOME SIREN

PROGRAM MODE LEVEL
Installer

FACTORY DEFAULT
OFF: Normal siren sound in Home Mode.

NOTES
This does not affect the RESET output.

This option selects the 'Quiet Siren' sound in Home Mode. The Quiet Siren sound is a continuous "beep beep beep" sound rather than the normal siren sound.

KPX+	P69E 3E to enable/disable the option
NAVIGATOR	P69E > enable/disable 3E
SMS*	P[MasterCode]E P[InstallerCode]E P69E 3E

P69E 4E — 6 BEEPS ON ARMING

PROGRAM MODE LEVEL
Installer

FACTORY DEFAULT
OFF: Keypad gives 3 beeps on Arming.

NOTES
The keypad beeps on Arm/Disarm when Arming/Disarming by keypad, keyswitch or by Radio Key.

Normally the keypad/s onboard sonalert/beeper gives 3 beeps when the panel is armed. Turning this option ON will give 6 keypad beeps when Arming.

KPX+	P69E 4E to enable/disable the option
NAVIGATOR	P69E > enable/disable 4E
SMS*	P[MasterCode]E P[InstallerCode]E P69E 4E

* SMS programming shows the full SMS string to send. KPX+ and NAVIGATOR programming assumes the panel is already in program mode.

P69E 5E — HOME ARMING BY RADIO KEY ON/OFF BUTTONS

PROGRAM MODE LEVEL
Installer

FACTORY DEFAULT
OFF: Radio Keys cannot Arm Home Mode.

NOTES
• Radio Key Home Arming will work only if one or more zones have been programmed as Home Zones (P51E).
• When using a Radio Keypad to Home arm, ensure that the ARM ONLY option is OFF for the USER CODE on the panel. Otherwise further Home E keypresses on the Radio keypad could AREA arm the panel.

RELATED OPTIONS
P51E Program Home zones.
P64E 1E Brief Home alarm.
P64E 6E Strobe Flash on Home arm by radio key
P69E 3E Quiet Home siren.
P69E 5E Home Arm by Radio Key.
P120E 2E Home arm chirps by Radio Key.
P120E 3E Radio Key AUX arms Home Monitor.
P120E 6E Smart Beeps.

Setting this option on allows Home Mode arming by Radio Key ON or OFF buttons.

Note: This is independent of Home arming by AUX button if using the RK4 radio key.

Operation:

- Press the Radio Key OFF button twice within 4 seconds.
or.... - Press the Radio Key ON button twice within 5 seconds.

See page 29 for Home operation.

KPX+	P69E 5E to enable/disable the option
NAVIGATOR	P69E > enable/disable 5E
SMS*	P[MasterCode]E P[InstallerCode]E P69E 5E

P69E 6E — DISABLE MAINS FAIL ALARM

PROGRAM MODE LEVEL
Installer

FACTORY DEFAULT
OFF: Mains Fail alarm normal.

NOTES
This does not affect mains fail reporting or saving to the History memory or operation of the Mains Fail output on the Output Expander.
Does not apply to Navigator keypad.

When set ON, a Mains Fail alarm is: a) Not displayed on the keypad b) Does not give warning beeps c) Is not saved to MEMORY and the MEMORY display does not flash.

KPX+	P69E 6E to enable/disable the option
NAVIGATOR	P69E > enable/disable 6E
SMS*	P[MasterCode]E P[InstallerCode]E P69E 6E

P69E 7E — BEEPS DURING EXIT DELAY - FULLY ARMED MODE

PROGRAM MODE LEVEL
Installer

FACTORY DEFAULT
Exit Beeps OFF.

RELATED OPTIONS
P28E Exit Delay Time.

When set ON, this option gives an audible warning during Exit Delay.

The keypad/s will beep slowly during Exit Delay when the panel is in exit delay (armed by any Area). When the Exit Time has 16 to 20 seconds remaining, the beeps will change to a faster double-beep for the remainder of the Exit Time. The end of Exit Time is announced by 3 beeps.

KPX+	P69E 7E to enable/disable the option
NAVIGATOR	P69E > enable/disable 7E
SMS*	P[MasterCode]E P[InstallerCode]E P69E 7E

P69E 8E — BEEPS DURING EXIT DELAY - HOME MODE

PROGRAM MODE LEVEL
Installer

FACTORY DEFAULT
Home Exit Beeps OFF.

RELATED OPTIONS
P28E Exit Delay Time

NOTES
1. Exit beeps cannot be stopped (i.e. by pressing a key on the keypad).
2. If another event causes a different keypad beep, the exit beeps resume once the event beeps are finished.

When set ON, This option gives an audible warning during Home Mode Exit Delay.

The sonalert will give a fast double-beep during Exit Delay when the panel is in Home Mode Exit Delay. The end of Exit Time is announced by 3 beeps.

KPX+	P69E 8E to enable/disable the option
NAVIGATOR	P69E > enable/disable 8E
SMS*	P[MasterCode]E P[InstallerCode]E P69E 8E

* SMS programming shows the full SMS string to send. KPX+ and NAVIGATOR programming assumes the panel is already in program mode.

P70E P71E	PHONE NUMBER 1 FOR CID REPORTING PHONE NUMBER 2 FOR CID REPORTING
RELATED OPTIONS P170E Phone No 1 for CID Reporting P171E Phone No 1 for CID Reporting	Changed option numbers in this version. These options are now P170E and P171E Page 47

P80E	PHONE NUMBER FOR CID TEST CALLS
RELATED OPTIONS P172E Phone No for CID Test Calls	Changed option number in this version. This option is now P172E Page 47

Option No.	Description	Default
P72E	ACCOUNT NUMBER 1	0000
P73E	ACCOUNT NUMBER 2	0000

P72E	ACCOUNT NUMBER 1 & 2
PROGRAM MODE LEVEL Installer **FACTORY DEFAULT** P72E Account No.1: 0000 P73E Account No.2: 0000 **RELATED OPTIONS** P79E Account No.2 zones	Account numbers for identifying the panel to the Central Station. Area 1 Open/Close reports will report on Account No.1 and Area 2 Open/Close reports will report on Account No.2. Zone Alarms can be assigned to report on either Account Number as set by Option P79E. All miscellaneous events (eg. Tampers, Mains Fail) will report on Account No. 1

KPX+	P72E [Account Number] E P73E [Account Number] E
NAVIGATOR	P72E > Enter Account Number P73E > Enter Account Number
SMS*	P[MasterCode]E P72E [Account Number]E P[MasterCode]E P73E [Account Number]E

HEX ACCOUNT NUMBERS USING NAVIGATOR KEYPAD

Navigator keypad provides buttons for entering Hex digits B, C, D, E, F in the P72E option.

HEX ACCOUNT NUMBERS USING KPX+ KEYPAD

Central station client codes can be entered in Hexadecimal as required by some central stations. Use the following keys to enter the hex digits B, C, D, E or F.

HEX DIGIT	KPX+ KEY	DISPLAYED AS
B	* Key	11
C	ARM Key	12
D	HOME Key	13
E	EXCLUDE Key	14
F	MEMORY key	15

SPECIAL CHARACTERS USING NAVIGATOR KEYPAD

Navigator keypad provides buttons for entering Pause, Star and Hash.

P170E~P171E SPECIAL CHARACTERS USING KPX+ KEYPAD

If required, pauses, * (star) or # (hash) VF digits can be included in the dialling sequence by using the keys in the table below.

SPECIAL CHARACTER	KEY ENTRY	KEYPAD DISPLAY
PAUSE (1.6sec)	ARM Key	12
* (Star)	HOME Key	10
# (Hash)	EXCLUDE Key	11

* SMS programming shows the full SMS string to send. KPX+ and NAVIGATOR programming assumes the panel is already in program mode.

SMS Option No.	Description	Default
P170E	CENTRAL STATION REPORTING NUMBER 1	
P171E	CENTRAL STATION REPORTING NUMBER 2	
P172E	CENTRAL STATION REPORTING NUMBER FOR TEST CALLS	

P170E — CENTRAL STATION REPORTING NUMBER 1

PROGRAM MODE LEVEL
Installer

FACTORY DEFAULT
None

NOTES
• IP Address, Domain Name, Telephone Numbers or can be up to 20 digits long.
• To delete a reporting number via LCD keypad, enter the MEMORY key in place of the telephone number. Example, to delete Reporting Number1, press: P170E MEMORY E

RELATED OPTIONS
P87E 1E Alternate Primary/Secondary numbers.
P86E 1E Disable Communicator.
P86E 2E Enable Contact ID reporting
P86E 3E Enable ARMOR IP reporting

For central station reporting, enter the **Primary IP address and Port** for reporting by IP protocol (recommended) or **Primary Telephone Number** for Contact ID reports (not recommended) or enter both.

Example, If you program a phone number in P170E and an IP address in P171E then reports will be sent to both, also depending on P87E 1E setting.

If your central station has issued a **Domain Name** (rather than IP address) this must be programmed via SMS.

PHONE NO VIA KPX+ IP ADDRESS VIA KPX+	P170E [New Number]E P170E[IPaddress]:[Port]E * (Home key) = dot in IP address # (Exclude key) = : colon, start of port number
NAVIGATOR	P170E > [New Number]E
PHONE No VIA SMS*	P[MasterCode]E P[InstallerCode]E P170E [Phone Number]E
IP ADDRESS VIA SMS*	P[MasterCode]E P[InstallerCode]E P170E [IP Address : Port]E
DOMAIN NAME VIA SMS*	T[MasterCode]E,P[InstallerCode]E,DN1,[Domain Name]:[Port No] *Example: T123E,P000000E,DN1,www.ness.com.au:9467* NOTES 1) The SMS reply includes the Domain Name, Port No. and the current IP address (if found) for the domain name. 2) If you are using a NAVIGATOR Keypad, the programmed Domain Name and Port No can be viewed on the Network Details page (in Program mode). 3) If the Domain Name has been programmed via SMS then P170E must not be further programmed by keypad. The option will display 0.0.0.0 via keypad display.

P171E — CENTRAL STATION REPORTING NUMBER 2

PROGRAM MODE LEVEL
Installer

FACTORY DEFAULT
None

Secondary Central Station Reporting number.

P171E programming method as per P170E above

P172E — CENTRAL STATION REPORTING NUMBER FOR TEST CALLS

RELATED OPTIONS
P87E 1E Alternate Primary/Secondary telephone numbers.
P86E 1E Disable Communicator.
P86E 2E Enable Contact ID reporting
P89E 1E Enable Test Calls

The phone number for Contact ID TEST reports to a central station. This is required if your central stations uses a dedicated phone number for test calls.

If this number is blank and test calls are enabled then the primary CID phone number P170E is used.

KPX+	P172E [New Phone Number]E
NAVIGATOR	P172E > [New Phone Number]E
SMS*	P[MasterCode]E P[InstallerCode]E P172E [New Phone Number]E

* SMS programming shows the full SMS string to send. KPX+ and NAVIGATOR programming assumes the panel is already in program mode.

Option No.	Description	Default
P180E	Phone Number 1 for SMS Alarms, Status Reports	
P181E	Phone Number 2 for SMS Alarms, Status Reports	
P182E	Phone Number 3 for SMS Alarms, Status Reports	
P183E	Phone Number 4 for SMS Area 1 Open/Close reports	
P184E	Phone Number 5 for SMS Area 2 Open/Close reports	
P185E	Phone Number 6 for SMS operation*	
P186E	Phone Number 7 for SMS operation*	
P187E	Phone Number 8 for SMS operation*	
P188E	Phone Number 9 for SMS operation*	
P189E	Phone Number 10 for SMS operation*	

P180E ~ P189E

PROGRAM MODE LEVEL
User or Installer

FACTORY DEFAULT
No telephone numbers.

NOTES
• Telephone numbers can be up to 20 digits long.
• Mobile numbers take the format 04xx xxx xxx without spaces.

RELATED OPTIONS
P86E 1E Disable Communicator
P190E Report zone alarms by SMS
P191E Report misc alarms by SMS
P192E Report zone restores by SMS
P193E Report misc restores by SMS
P194E 1E Report Area1 O/C by SMS
P194E 2E Report Area2 O/C by SMS

NOTES
• If P86E 1E Disable Communicator is ON the panel will not send any SMS messages (no alarm reports or ACK replies).
See page 19 for SMS messaging examples.
• P184E Area 2 open/close reports is available in V10.8 and later. Earlier versions report both Area 1 and Area 2 open/close reports as Area 1.

SMS PHONE NUMBERS

Phone Numbers 1 to 3 will receive SMS alarm reports and status reports but not open/close reports.

Phone Numbers 4 & 5 will receive SMS open/close reports only. (Open Close reports for each area must be enabled by P194E 1E & 2E)

***Phone Numbers 6 to 10** are used for the panel to recognise "Known" phone numbers and reply appropriately to operation and programming commands. These numbers do not receive any SMS alarm reports.
Note 1. Phone numbers 6 to 10 are not essential if the phone sending SMS commands is programmed in one of Phone Numbers 1 to 5.

Note 2. The panel will respond to a valid command from any mobile phone number, not just the numbers programmed. However, "Unknown" phone numbers will not get replies to invalid messages. See **SMS Responses** on page 14.

For the user's convenience, all SMS phone numbers are programmable in User program Mode (and of course in Installer Program Mode).

KPX+	PxxxE [New Phone Number]E
NAVIGATOR	PxxxE > [New Phone Number]E
SMS*	P[MasterCode]E P[InstallerCode]E PxxxE [New Phone Number]E

To delete a telephone number.

By keypad: Enter the MEMORY key in place of the telephone number. Example, to delete SMS Telephone Number 1 press: P180E MEMORY E

By SMS: Enter V in place of the telephone number. Example, to delete SMS Telephone Number 1 send the SMS message, P[MasterCode]E P[InstallerCode]E P180EVE

* SMS programming shows the full SMS string to send. KPX+ and NAVIGATOR programming assumes the panel is already in program mode.

Option No.	Description	ZONES 1–8 (D8 & D16) 1	2	3	4	5	6	7	8	ZONES 9–16 (D16) 9	10	11	12	13	14	15	16
P74E	REPORT ZONE ALARMS by CID	ON	ON	ON	ON	ON	ON	ON	ON	ON	ON	ON	ON	ON	ON	ON	ON
P76E	REPORT ZONE RESTORALS by CID	ON	ON	ON	ON	ON	ON	ON	ON	ON	ON	ON	ON	ON	ON	ON	ON
P190E	REPORT ZONE ALARMS by SMS	ON	ON	ON	ON	ON	ON	ON	ON	ON	ON	ON	ON	ON	ON	ON	ON
P192E	REPORT ZONE RESTORALS by SMS	ON	ON	ON	ON	ON	ON	ON	ON	ON	ON	ON	ON	ON	ON	ON	ON
P78E	MULTIPLE ZONE ALARMS																
P79E	ACCOUNT NUMBER 2 ZONES																

P74E, P190E — REPORT ZONE ALARMS

PROGRAM MODE LEVEL
Installer

FACTORY DEFAULT
All ON: All zones report Alarms.

Select which zones will send Alarm reports to the Central Station in CID format or by SMS with the flexibility to choose which zones are reported in each format.

KPX+	PxxE [Zone Number] E to enable/disable zones
NAVIGATOR	PxxE > Select zones
SMS*	P[MasterCode]E P[InstallerCode]E PxxE [Zone Number] E

P76E, P192E — REPORT ZONE RESTORALS

PROGRAM MODE LEVEL
Installer

FACTORY DEFAULT
All ON: All zones report Restorals.

RELATED OPTIONS
P82E 1E Send Restoral immediately.
P82E 2E Send Restoral after siren time.
P82E 3E Send Restoral on Disarm & seal.
P82E 4E Send Restoral on Disarm always.

This option selects which zone inputs will send Restoral reports to the Central Station or SMS. Only zones that have previously sent an Alarm will send a Restoral.

KPX+	PxxE [Zone Number] E to enable/disable zones
NAVIGATOR	PxxE > Select zones
SMS*	P[MasterCode]E P[InstallerCode]E PxxE [Zone Number] E

P78E — REPORT MULTIPLE ZONE ALARMS

PROGRAM MODE LEVEL
Installer

FACTORY DEFAULT
No zones report Multiple Alarms.

NOTES
Only zones that have previously sent an Alarm will send a Restoral.

RELATED OPTIONS
P89E 4E Swinger shutdown.

Zones selected for Multiple Zone Alarms will report each time the zone alarms and without a restore being sent. The number of reports is a maximum of 15. The number of alarms sent for each Multiple Zone Alarm can be reduced to 3 by using the swinger shutdown option P89E 4E.

Zones not selected report only once, until reset by an opening or a valid code.

KPX+	P78E [Zone Number] E to enable/disable zones
NAVIGATOR	P78E > Select zones
SMS*	P[MasterCode]E P[InstallerCode]E P78E [Zone Number] E

P79E — ACCOUNT NO.2 ZONES

PROGRAM MODE LEVEL
Installer

FACTORY DEFAULT
None

Zones selected to be Account No.2 zones will report their Alarms, Restorals and Excludes on Client code 2.

KPX+	P79E [Zone Number] E to enable/disable zones
NAVIGATOR	P79E > Select zones
SMS*	P[MasterCode]E P[InstallerCode]E P79E [Zone Number] E

KPX+ PRO TIP
When selecting zones, **MEMORY E** selects all zones, **0 E** deselects all zones

* SMS programming shows the full SMS string to send. KPX+ and NAVIGATOR programming assumes the panel is already in program mode.

	ALARM DEFAULT	RESTORAL DEFAULT	D8 by CID		D16 by CID		D8/D16 by SMS	
			ALARM	RESTORAL	ALARM	RESTORAL	ALARM	RESTORAL
Duress		ON	P75E 1E	P77E 1E	P75E 1E	P77E 1E	P191E 1E	P193E 1E
Medical		ON	P75E 2E	P77E 2E	P75E 2E	P77E 2E	P191E 2E	P193E 2E
KP Panic & KS Panic	ON	ON	P75E 3E	P77E 3E	P75E 3E	P77E 3E	P191E 3E	P193E 3E
Fire		ON	P75E 4E	P77E 4E	P75E 4E	P77E 4E	P191E 4E	P193E 4E
Panel tamper	ON	ON	P75E 5E	P77E 5E	P75E 5E	P77E 5E	P191E 5E	P193E 5E
External tamper	ON	ON	P75E 6E	P77E 6E	P75E 6E	P77E 6E	P191E 6E	P193E 6E
Keypad Tamper	ON	ON	P75E 7E	P77E 7E	P75E 7E	P77E 7E	P191E 7E	P193E 7E
Exit Installer Mode		ON	P75E 8E	P77E 8E	P75E 8E	P77E 8E	P191E 8E	P193E 8E
Radio Tamper	ON	ON	P92E 1E	P93E 1E	P75E 9E	P77E 9E	P191E 9E	P193E 9E
Radio Panic	ON	ON	P92E 2E	P93E 2E	P75E 10E	P77E 10E	P191E 10E	P193E 10E
Radio Battery		ON	P92E 3E	P93E 3E	P75E 11E	P77E 11E	P191E 11E	P193E 11E
Supervision fail		ON	P92E 4E	P93E 4E	P75E 12E	P77E 12E	P191E 12E	P193E 12E
Panel battery	ON	ON	P92E 5E	P93E 5E	P75E 13E	P77E 13E	P191E 13E	P193E 13E
Mains fail	ON	ON	P92E 6E	P93E 6E	P75E 14E	P77E 14E	P191E 14E	P193E 14E
[not used]		ON	P92E 7E	P93E 7E	P75E 15E	P77E 15E	P191E 15E	P193E 15E
[not used]		ON	P92E 8E	P93E 8E	P75E 16E	P77E 16E	P191E 16E	P193E 16E

P75E, P92E, P191E P77E, P93E, P193E

REPORT MISCELLANEOUS ALARMS
REPORT MISCELLANEOUS RESTORALS

PROGRAM MODE LEVEL
Installer

FACTORY DEFAULT
See table.

RELATED OPTIONS
P82E Restoral Reporting Options

KPX+ PRO TIP
When selecting zones, MEMORY E selects all, 0 E deselects all.

These options select which Miscellaneous alarms will trigger the communicator to send Miscellaneous Alarm and Restoral reports to the Central Station or by SMS messaging.

Alarms are sent on activation. Restorals are sent according to P82E settings. Mains Fail and Low Battery Restorals are sent when the power has been restored.

Note the different program option numbers for the D8 and D16.

KPX+	PxxE [Zone Number] E to enable/disable zones
NAVIGATOR	PxxE or P92E > Select zones
SMS*	P[MasterCode]E P[InstallerCode]E PxxE [Zone Number] E

xx = See the table for program option numbers

	Option No.	Description	Default
P82E	1E	Send RESTORAL report immediately	OFF
	2E	Send RESTORAL after siren time	OFF
	3E	Send RESTORAL after Disarm & seal	OFF
	4E	Send RESTORAL after Disarm always	ON

P82E 1E–4E

RESTORAL REPORTING OPTIONS

PROGRAM MODE LEVEL
Installer

FACTORY DEFAULT
4E, ON: Always send Restoral on Disarm.

RELATED OPTIONS
P76E Report zone restorals.

This option selects when the communicator sends zone Restoral reports. Only one of the following options may be selected.

Restoral reporting options also apply to 24hr zones.

KPX+	P82E xE to enable/disable the option
NAVIGATOR	P82E > enable/disable xE
SMS*	P[MasterCode]E P[InstallerCode]E P82E xE

x = 1E, 2E, 3E or 4E

* SMS programming shows the full SMS string to send. KPX+ and NAVIGATOR programming assumes the panel is already in program mode.

Option No.	Description	Default	Note
P83E	TEST CALL INTERVAL	84	x2 = 168hrs
P84E	TIME BEFORE NEXT TEST CALL	none	x2 = 12hrs
P85E	POLLING INTERVAL	8 (OFF)	5~8

P83E — TEST CALL INTERVAL

PROGRAM MODE LEVEL
Installer

FACTORY DEFAULT
84 (=168hrs =7 days).

NOTES
• Enter a value from 1 to 99.

RELATED OPTIONS
P89E 1E Enable Test Calls.
P84E Time Before Next Test Call.

Test calls to the Central Station can be sent at intervals between 2 and 198 hours in 2 hour increments. Programmable from 2 to 198 Hours. Enter a value between 1 and 99. (This is automatically multiplied by 2).

EXAMPLE: To program daily test calls: P83E12E

Test Calls must be enabled by option P89E 1E.

KPX+	P83E [New Time] E
NAVIGATOR	P83E > [New Time] E
SMS*	P[MasterCode]E P[InstallerCode]E P83E [NewTime] E

P84E — TIME BEFORE NEXT TEST CALL

PROGRAM MODE LEVEL
Installer

FACTORY DEFAULT
none

NOTES
1. Enter a value from 1 to 99
2. If Test Calls are to start immediately, then the value is set to 0.
3. The Time Before Next Test Call is a dynamic value. When viewed, the current value will be displayed (not the initially entered value).

RELATED OPTIONS
P89E 1E, Enable Test Calls.
P83E, Test Call interval.

INSTALLER'S TIP
Use P88888888E prior to powering down for a short time. This will save the current Time Before Next Test Call and the Real Time Clock into permanent memory. On power up these times will be restored.

This option sets the time before the next test call and is used to set the preferred time for Test Calls. Programmable from 2 to 198 Hours. Enter a value between 1 and 99. (This is automatically multiplied by 2).

Examples:

A. New Installation: Set the time before the next test call.

E.g., If you are programming the panel at 5pm and you want test calls to be sent at 1am. Enter P84E 4E (4 x 2 =8hrs. Therefore 5pm + 8hrs =1am).

B. Existing Installation: To reset the time that test calls are sent.

E.g., Our example panel is sending test calls at 1am and you want to change it to 2am. If you are programming the panel at 6pm, enter P84E 4E (4 x 2 =8hrs. Therefore 6pm + 8hrs =2am).

KPX+	P84E [New Time] E
NAVIGATOR	P84E > [New Time] E
SMS*	P[MasterCode]E P[InstallerCode]E P84E [NewTime] E

P85E — POLLING INTERVAL

PROGRAM MODE LEVEL
Installer

FACTORY DEFAULT
OFF

NOTES
• Enter a value from 5 to 8

RELATED OPTIONS
P86E 3E Enable reporting by ARMOR IP

Refer to CSV?

The polling interval for IP reporting for can be set from 10 mins to 24hrs.

Enter a value 5~8

5=4hr, 6=12hr, 7=24hr, 8=OFF (Default)

KPX+	P85E [New Time] E
NAVIGATOR	P85E > [New Time] E
SMS*	P[MasterCode]E P[InstallerCode]E P85E [NewTime] E

NOTE: *Intervals 1~4 exist for test purposes only and are not recommended for permanent use by 4G providers to prevent excessive traffic.
1=10min, 2=20min, 3=30min, 4=1hr

* SMS programming shows the full SMS string to send. KPX+ and NAVIGATOR programming assumes the panel is already in program mode.

Option No.		Description	Default
P86E	1E	Disable Communicator	OFF
	2E	Enable reporting by CONTACT ID	ON
	3E	Enable reporting by ARMOR IP	OFF

P86E 1E — DISABLE COMMUNICATOR

PROGRAM MODE LEVEL
Installer

FACTORY DEFAULT
Off: Communicator is enabled.

NOTES
When should this option be used?
1. To temporarily prevent central station reports and outgoing SMS messages while testing the system. (Not essential but useful)

2. To permanently disable the communicator if using the panel without a SIM.

Communicator Buffer
Disabling the communicator also clears the SMS and reporting queue. In addition, the panel does not buffer any alarm messages while the communicator is disabled to prevent a flood of outgoing messages once it is re-enabled.

Signal Strength Indicator
While the communicator is disabled, the keypad/s will show Signal Strength level 0 (zero) even if a SIM card remains fitted.

When this option is on the communicator is disabled even if telephone numbers and other comms options are programmed.

This option disables both incoming and outgoing communications. No alarm reports will be sent and the panel will ignore incoming SMS messages.

Turn this option on if you are using the panel as a local system without an active SIM card. Leaving the communicator enabled without a SIM will generate unwanted errors.

KPX+	P86E 1E to enable/disable the option
NAVIGATOR	P86E > enable/disable 1E
SMS*	P[MasterCode]E P[InstallerCode]E P86E 1E

P86E 2E — ENABLE REPORTING BY CONTACT ID (CID)

PROGRAM MODE LEVEL
Installer

FACTORY DEFAULT
On: CID reporting enabled.

RELATED OPTIONS
P170E Phone No 1 for reporting
P171E Phone No 2 for reporting
P87E 3E Enable reporting by SMS

NOTES
The panel can send alarm reports to a central station by CID, ARMOR IP or to mobile phone number/s by SMS or all.

CID is available as an option only if your central station does not offer Armor IP.

This option enables reporting to a central station in Contact ID (CID) format via CID phone numbers programmed at P170E, P171E

KPX+	P86E 2E to enable/disable the option
NAVIGATOR	P86E > enable/disable 2E
SMS*	P[MasterCode]E P[InstallerCode]E P86E 2 E

CONTACT ID Message Format Table, Page 18

P86E 3E — ENABLE REPORTING BY ARMOR IP

PROGRAM MODE LEVEL
Installer

FACTORY DEFAULT
OFF: ARMOR IP reporting disabled.

RELATED OPTIONS
P170E Phone No 1 for reporting
P171E Phone No 2 for reporting
P85E Polling Interval

NOTES
The panel can send alarm reports to a central station by CID, ARMOR IP or to mobile phone number/s by SMS or all.

ARMOR IP is the recommended central station reporting protocol.
Central station receiver setting: UDP, UNENCRYPTED.

This option enables reporting to a central station in ARMOR IP format. Program central station IP Address at P170E, P171E

KPX+	P86E 3E to enable/disable the option
NAVIGATOR	P86E > enable/disable 3E
SMS*	P[MasterCode]E P[InstallerCode]E P86E 3 E

ARMOR IP Message Format Table, Page 18

* SMS programming shows the full SMS string to send. KPX+ and NAVIGATOR programming assumes the panel is already in program mode.

Option No.		Description	Default
P87E	1E	Split Reporting on Primary/Secondary numbers	OFF
	2E	[not used]	OFF
	3E	Enable reporting by SMS	ON
	4E	4 Reporting attempts	ON

P87E 1E — SPLIT REPORTING ON PRIMARY/SECONDARY PHONE NUMBERS

PROGRAM MODE LEVEL
Installer

FACTORY DEFAULT
OFF: Split Reporting

RELATED OPTIONS
P87E 4E Number of Reporting attempts.

This option selects the order in which reports are sent via Phone No. 1 & 2.

Option OFF: Split Dial. Report via Phone No.1 for half of the call attempts. If unsuccessful, send the last half of call attempts via Phone No.2.

Option ON: Alternate Dial. Report via Phone No.1 on the first attempt. If no answer use Phone No.2, continue alternating until successful.

If IP reporting has been selected in P86E then the reporting channel can be split using this option.

For instance if Phone No.1 is programmed to a CID Phone No. and Phone No.2 to an IP address then reporting will be alternated as per the P87E 1E setting until successful.

KPX+	P87E 1E to enable/disable the option
NAVIGATOR	P87E > enable/disable 1E
SMS*	P[MasterCode]E P[InstallerCode]E P87E 1E

P87E 3E — ENABLE REPORTING BY SMS

PROGRAM MODE LEVEL
Installer

FACTORY DEFAULT
On: SMS reporting enabled.

RELATED OPTIONS
P180E to P189E Phone numbers for SMS reporting
P86E 2E Enable reporting by Contact ID

NOTES
• This option only affects outgoing reporting by SMS so if the option is disabled the panel will still reply to incoming SMS commands.

This option enables reporting to mobile phones by SMS messaging via SMS phone numbers programmed at P180E to P189E

KPX+	P87E 3E to enable/disable the option
NAVIGATOR	P87E > enable/disable 3E
SMS*	P[MasterCode]E P[InstallerCode]E P87E 3 E

P87E 4E — NUMBER OF REPORTING ATTEMPTS

PROGRAM MODE LEVEL
Installer

FACTORY DEFAULT
ON: 4 dialling attempts.

NOTES
• Sets the total number of reporting attempts. E.g. If 4 attempts is selected, this means 2 attempts per reporting number.

RELATED OPTIONS
P87E 1E Split Reporting

Sets the number of reporting attempts when sending reports to a Central Station.

OFF: 10 attempts maximum then 5min sleep, then 10 more re-tries if unsuccessful.

ON: 4 attempts maximum then 5min sleep, then 4 more re-tries if unsuccessful.

If all attempts fail the communicator waits for the next trigger event. The previously unsuccessful report will be included in the new message.

When sending Test Calls, the time between reporting attempts increases to 60 minutes for the second round of reports. If a Test Call is unsuccessful after the first round of calls are made, another call is made after 5 minutes. If this call fails then subsequent calls are made every hour (up to the maximum number of calls).

KPX+	P87E 4E to enable/disable the option
NAVIGATOR	P87E > enable/disable 4E
SMS*	P[MasterCode]E P[InstallerCode]E P87E 4E

* SMS programming shows the full SMS string to send. KPX+ and NAVIGATOR programming assumes the panel is already in program mode.

Option No.		Description	Default
P88E	1E	Send AREA 1 Open/Close reports to Central Station	OFF
	2E	Send AREA 2 Open/Close reports to Central Station	OFF
	3E	Siren Chirp on Kiss-off	OFF
	4E	Flash Strobe on Kiss-off	OFF
	5E	Forced Opening report	ON
	6E	Delayed Closing Reports	OFF
	7E	Manual Exclude Reports	ON
	8E	Auto Exclude Reports	ON
P194E	1E	Send AREA 1 Open/Close reports by SMS	OFF
	2E	Send AREA 2 Open/Close reports by SMS	OFF

P88E 1E, P194E 1E — AREA1 OPEN/CLOSE REPORTS

PROGRAM MODE LEVEL
Installer

FACTORY DEFAULT
OFF: No AREA1 Open/Close reports to Central Station or by SMS.

Enables AREA1 Open/Close reports when reporting to a Central Station or by SMS with separate settings for each format.

The User ID of the code used is included in the report.

Keyswitch arming is identified as User 57. Shortcut arming is identified as User 58.

KPX+	P88E 1E to enable/disable Area 1 Open/Close reports to Central Stn P194E 1E to enable/disable Area 1 Open/Close reports by SMS
NAVIGATOR	PxxE > enable/disable 1E
SMS*	P[MasterCode]E P[InstallerCode]E PxxE 1E

P88E 2E, P194E 2E — AREA2 OPEN/CLOSE REPORTS

PROGRAM MODE LEVEL
Installer

FACTORY DEFAULT
OFF: No AREA2 Open/Close reports to Central Station or by SMS.

Enables AREA2 Open/Close reports when reporting to a Central Station or by SMS with separate settings for each format.

KPX+	P88E 2E to enable/disable Area 2 Open/Close reports to Central Stn P194E 2E to enable/disable Area 2 Open/Close reports by SMS
NAVIGATOR	PxxE > enable/disable 2E
SMS*	P[MasterCode]E P[InstallerCode]E PxxE 2E

P88E 3E — SIREN CHIRP ON KISS-OFF

PROGRAM MODE LEVEL
Installer

FACTORY DEFAULT
OFF: No Siren Chirp on kiss-off.

RELATED OPTIONS
P88E 4E Flash Strobe on kiss-off.

Enables a two second Siren burst on a successful Closing report. This is used to give audible indication that the communicator has successfully sent the Arming report to the central station.

KPX+	P88E 3E to enable/disable the option
NAVIGATOR	P88E > enable/disable 3E
SMS*	P[MasterCode]E P[InstallerCode]E P88E 3E

P88E 4E — STROBE FLASH ON KISS-OFF

PROGRAM MODE LEVEL
Installer

FACTORY DEFAULT
OFF: No Strobe Flash on kiss-off.

RELATED OPTIONS
P88E 3E Siren Chirp on kiss-off.

Enables a two second Strobe burst on a successful Closing report. This is used to give visual indication that the communicator has successfully sent the Arming report to the central station.

KPX+	P88E 4E to enable/disable the option
NAVIGATOR	P88E > enable/disable 4E
SMS*	P[MasterCode]E P[InstallerCode]E P88E 4E

* SMS programming shows the full SMS string to send. KPX+ and NAVIGATOR programming assumes the panel is already in program mode.

P88E 5E

PROGRAM MODE LEVEL
Installer

FACTORY DEFAULT
ON: Forced opening Reports enabled

NOTES
This option is used to indicate to the Central Station that an alarm has been reset by a valid user.
Usually used in cases where Open/Close reports are normally selected OFF.

FORCED OPENING REPORT

If Forced Opening Report is enabled – when an alarm has been reset by a valid User Code (or Radio Key), the communicator will send an Opening report along with a restoral report for the zone or miscellaneous input which caused the alarm.

KPX+	P88E 5E to enable/disable the option
NAVIGATOR	P88E > enable/disable 5E
SMS*	P[MasterCode]E P[InstallerCode]E P88E 5E

P88E 6E

PROGRAM MODE LEVEL
Installer

FACTORY DEFAULT
OFF: Closing Reports sent on Arming.

RELATED OPTIONS
P88E 1E AREA1 Open/Close reports.
P88E 2E AREA2 Open/Close reports.

DELAY CLOSING REPORT

If enabled, Closing reports (if enabled) are sent at the end of Exit Time. Normally, Closing reports are sent immediately on arming.

KPX+	P88E 6E to enable/disable the option
NAVIGATOR	P88E > enable/disable 6E
SMS*	P[MasterCode]E P[InstallerCode]E P88E 6E

P88E 7E

PROGRAM MODE LEVEL
Installer

FACTORY DEFAULT
ON: Manual Exclude Reports enabled.

RELATED OPTIONS
P88E 8E Auto Exclude Reports.

MANUAL EXCLUDE REPORT

Enables Manual Exclude Reports for zones. Exclude Reports for 24hr zones are sent on exiting EXCLUDE mode.

KPX+	P88E 7E to enable/disable the option
NAVIGATOR	P88E > enable/disable 7E
SMS*	P[MasterCode]E P[InstallerCode]E P88E 7E

P88E 8E

PROGRAM MODE LEVEL
Installer

FACTORY DEFAULT
ON: Auto Exclude Reports enabled.

RELATED OPTIONS
P88E 7E Manual Exclude Reports.

AUTO EXCLUDE REPORT

Enables Auto Exclude Reports for Zones. Zones not sealed on arming will be reported as Auto Excluded.

KPX+	P88E 8E to enable/disable the option
NAVIGATOR	P88E > enable/disable 8E
SMS*	P[MasterCode]E P[InstallerCode]E P88E 8E

* SMS programming shows the full SMS string to send. KPX+ and NAVIGATOR programming assumes the panel is already in program mode.

Option No.		Description	Default
P89E	1E	ENABLE TEST CALLS	ON
	2E	Mains Report Delay (1 hour)	ON
	3E	[not used]	OFF
	4E	Swinger shutdown	ON
	5E	Line Fault Monitor	OFF
	6E	Master Code Clears Dial Attempts	OFF
	7E	[not used]	OFF
	8E	[not used]	OFF

P89E 1E — ENABLE TEST CALLS

PROGRAM MODE LEVEL
Installer

FACTORY DEFAULT
ON: Test Calls enabled.

RELATED OPTIONS
P83E Test Call Interval.
P84E Time before next Test call.
P87E 4E Number of attempts.

NOTES
Test Calls cannot be sent by SMS, only to a central station.

Enables the reporting of test calls to the Central station.

KPX+	P89E 1E to enable/disable the option
NAVIGATOR	P89E > enable/disable 1E
SMS*	P[MasterCode]E P[InstallerCode]E P89E 1E

P89E 2E — MAINS REPORT DELAY

PROGRAM MODE LEVEL
Installer

FACTORY DEFAULT
ON: Mains Fail report is delayed.

Allows Mains Fail reports to be delayed by one hour if the mains power has been off continuously for that time. This avoids mains fail reports being sent to the Central Station in the event of brief power failures.

KPX+	P89E 2E to enable/disable the option
NAVIGATOR	P89E > enable/disable 2E
SMS*	P[MasterCode]E P[InstallerCode]E P89E 2E

P89E 4E — SWINGER SHUTDOWN

PROGRAM MODE LEVEL
Installer

FACTORY DEFAULT
ON: Swinger Shutdown enabled.

NOTES
This prevents unnecessary multiple alarms reported to the Central station in cases, for example, where a door is 'swinging' in the wind.
This option only applies to zones enabled to Report Multiple Zone Alarms.

RELATED OPTIONS
P78E Report Multiple Zone Alarms.

Limits the number of calls made by a zone alarm in any one armed period. Alarm reports are normally limited to 15 multiple reports per zone. When Swinger Shutdown is enabled, multiple reports are reduced to 3 multiple reports per zone.

KPX+	P89E 4E to enable/disable the option
NAVIGATOR	P89E > enable/disable 4E
SMS*	P[MasterCode]E P[InstallerCode]E P89E 4E

* SMS programming shows the full SMS string to send. KPX+ and NAVIGATOR programming assumes the panel is already in program mode.

P89E 5E — LINE FAULT MONITOR

PROGRAM MODE LEVEL
Installer

FACTORY DEFAULT
OFF: No Line Fault Monitor.

RELATED OPTIONS
P122E 5E Line Fault to AUX2

When this option is enabled the keypad/s will display cellular signal errors.

If the cellular signal is low or absent KPX keypad will flash CELL 00, Navigator displays Line Fault.

KPX+	P89E 5E to enable/disable the option
NAVIGATOR	P89E > enable/disable 5E
SMS*	P[MasterCode]E P[InstallerCode]E P89E 5E

P89E 6E — MASTER CODE CLEARS DIAL ATTEMPTS

PROGRAM MODE LEVEL
Installer

FACTORY DEFAULT
OFF

When this option is enabled, any keypad or SMS command using the master Code (User code 1) resets the re-dialling attempts to zero. The effect is to restart the dialling queue and send any queued communicator reports immediately.

KPX+	P89E 6E to enable/disable the option
NAVIGATOR	P89E > enable/disable 6E
SMS*	P[MasterCode]E P[InstallerCode]E P89E 6E

		ZONES 1–8 **(D8 & D16)**							
Option No.	Description	**1**	**2**	**3**	**4**	**5**	**6**	**7**	**8**
P94E	"NO MEMORY WARNING"ZONES								

P94E — NO MEMORY WARNING ZONES

PROGRAM MODE LEVEL
Installer

FACTORY DEFAULT
no zones selected.

NOTES
Applies to zones 1-8 only for both D8XCEL and D16XCEL

Select zones that do not flash the Memory indicator on the keypad/s. Alarm events on those zones are still stored in memory and can be reviewed as normal.

KPX+	P94E [Zone Number] E to enable/disable zones
NAVIGATOR	P94E > Select zones
SMS*	P[MasterCode]E P[InstallerCode]E P94E [Zone Number] E

KPX+ PRO TIP

When selecting zones, **MEMORY E** selects all zones, **0 E** deselects all zones

* SMS programming shows the full SMS string to send. KPX+ and NAVIGATOR programming assumes the panel is already in program mode.

These options allow selective restoring of factory defaults. For example, you can default (clear) all the User Codes, without affecting any other programmed options.

Option No.	Description
P95E	CLEAR RADIO DEVICES
P96E	CLEAR MEMORY
P97E	CLEAR PANEL OPTIONS (RESTORE FACTORY DEFAULTS)
P98E	CLEAR USER CODES
P99E	PROGRAM INSTALLER CODE

P95E — CLEAR RADIO DEVICES

PROGRAM MODE LEVEL
Installer

FACTORY DEFAULT
[not applicable]

This option clears all Radio Devices assigned to zones 1–8 or 1–16.

(This option does not clear User Codes).

KPX+	P95E to delete radio device codes
NAVIGATOR	P95E > to delete radio device codes
SMS*	P[MasterCode]E P[InstallerCode]E P95E

P96E — CLEAR MEMORY

PROGRAM MODE LEVEL
Installer

FACTORY DEFAULT
[not applicable]

This option clears events in the Alarm Memory display.

Note: This option clears only the 20 event memory as read by KPX+ and Saturn keypads. Ness Navigator touch screen keypad's 80 event memory is not affected.

KPX+	P96E to clear alarm memory
NAVIGATOR	P96E > to clear alarm memory
SMS*	P[MasterCode]E P[InstallerCode]E P96E

P97E — CLEAR PANEL OPTIONS

PROGRAM MODE LEVEL
Installer

FACTORY DEFAULT
[not applicable]

NOTES
Note, this option will also delete Radio Devices programmed on zones.

This option restores all panel program options to their factory default values.

Defaults all program options except User Codes and Radio Codes.

Note, this option will also delete Radio Devices programmed on zones.

KPX+	P97E to restore factory defaults
NAVIGATOR	P97E > to restore factory defaults
SMS*	P[MasterCode]E P[InstallerCode]E P97E

P98E — CLEAR USER CODES

PROGRAM MODE LEVEL
Installer

FACTORY DEFAULT
User Code 1: 123
All other codes: [blank]

NOTES
This option DOES NOT clear the Installer Code.

This option defaults all User Codes, (all Keypad Codes, Radio Keys and Access cards) and restores User Code 1 to the factory setting of 123.

P201E – P256E are defaulted (User Codes 1–56)

KPX+	P98E to default user codes
NAVIGATOR	P97E > to default user codes
SMS*	P[MasterCode]E P[InstallerCode]E P98E

P99E — PROGRAM THE INSTALLER CODE

PROGRAM MODE LEVEL
Installer

FACTORY DEFAULT
000000

Programs the installer code. This code can be 3 to 6 digits long. Factory default installer code is 000000.

KPX+	P99E [New Installer Code] E [New Installer Code] E
NAVIGATOR	P99E > [New Installer Code] E [New Installer Code] E
SMS*	P[MasterCode]E P[InstallerCode]E P99E [New Installer Code] E

For a complete list of factory default values, see the Programming Options Summary on pages 87–92.

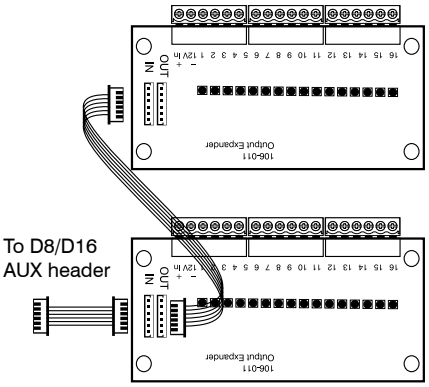

Max. 2 optional 106-011 output expanders

Option No.		Description	Default
P117E	1E	Enable Output Expander	OFF
	2E	Expander Output Format A & B	OFF
	3E	Day Zone follower	OFF
	4E	Output Exclude	OFF
	5E	Expander Output Format C	OFF
	6E	User Code Toggle or Pulse	OFF
	7E	[not used]	OFF
	8E	[not used]	OFF

P117E — OUTPUT EXPANDER OPTIONS 1E - 8E

PROGRAM MODE LEVEL
Installer

FACTORY DEFAULT
Refer to table.

Enable or disable P117E 1E to 8E as required.

KPX+	P117E 1E - 8E to enable/disable options as required
NAVIGATOR	P117E > enable/disable 1E - 8E as required
SMS*	P[MasterCode]E P[InstallerCode]E P117E [1E -8E] as required

P117E 1E — ENABLE OUTPUT EXPANDER

FACTORY DEFAULT
OFF: No Output Expander.

NOTES
Connect up to two Output Expander boards.

Selecting this option enables the optional 106-011 Output Expander/s (two expanders can be connected as per the diagram on this page).

When this option is enabled, the AUX connector on the main board will only drive the Output Expander.

When this option is disabled, the AUX header is used for the 106-013 Four Relay Board.

P117E 2E — ALTERNATE EXPANDER FORMAT A, B

FACTORY DEFAULT
OFF

NOTES
- The second expander plugs into the second 6-way header on the first expander. The expander closest to the panel becomes Expander 1.
- The User Code outputs will follow the ON/OFF state of the User Codes 13 to 15. These outputs can be made to change via:
  A) Radio key. Pressing the ON button turns the output On, OFF turns it OFF. A Radio key must be programmed to a User Code 13~15 for this will operate.
  B) Radio keypad auxiliary key. The radio keypad auxiliary key (there are 2 auxiliary keys) must be programmed to a User Code 13~15.
  C) The D8x/D16x keypad using ARM - DISARM with a User Code. Enter Arm+User_Code_13~15 to turn the output on. User_Code_13~15 + E will turn the output off.
  Note that the USER CODE does not have to be assigned to an AREA for this to work.

- If P117E 6E is ON then the ARM, DISARM buttons on Radio Keys do not change the Code13-15 outputs on the output expander.
Only the AUX button works, pulsing ON the Code13-15 output for the time set by P145E.

Use this option along with option P117E 5E to configure the output expander outputs as per the output tables.

Three different combinations of outputs are available for either a single or dual output expanders.

	Output Format A		Output Format B		Output Format C	
	P117E 1E = ON P117E 2E = OFF P117E 5E = OFF		P117E 1E = ON P117E 2E = ON P117E 5E = OFF		P117E 1E = ON P117E 2E = OFF P117E 5E = ON	
OUTPUT	**EXPANDER 1** (Or if using only one expander)	**EXPANDER 2**	**EXPANDER 1** (Or if using only one expander)	**EXPANDER 2**	**EXPANDER 1** (Or if using only one expander)	**EXPANDER 2**
1	Zone 1	Aux 5	Zone 1	Aux 5	Aux 5	Zone 1
2	Zone 2	Aux 6	Zone 2	Aux 6	Aux 6	Zone 2
3	Zone 3	Aux 7	Zone 3	Aux 7	Aux 7	Zone 3
4	Zone 4	Aux 8	Zone 4	Aux 8	Aux 8	Zone 4
5	Zone 5	User Code 13	Zone 5	User Code 13	User Code 13	Zone 5
6	Zone 6	User Code 14	Zone 6	User Code 14	User Code 14	Zone 6
7	Zone 7	User Code 15	Zone 7	User Code 15	User Code 15	Zone 7
8	Zone 8	Tel. Line Fail	Zone 8	Tel. Line Fail	Tel. Line Fail	Zone 8
9	Zone 9	Aux 1	Aux 1	Zone 9	Aux 1	Zone 9
10	Zone 10	Aux 2	Aux 2	Zone 10	Aux 2	Zone 10
11	Zone 11	Aux 3	Aux 3	Zone 11	Aux 3	Zone 11
12	Zone 12	Aux 4	Aux 4	Zone 12	Aux 4	Zone 12
13	Zone 13	Arm Home	Arm Home	Zone 13	Arm Home	Zone 13
14	Zone 14	Mains Fail	Mains Fail	Zone 14	Mains Fail	Zone 14
15	Zone 15	Battery Fail	Battery Fail	Zone 15	Battery Fail	Zone 15
16	Zone 16	Ext. Tamper	Ext. Tamper	Zone 16	Ext. Tamper	Zone 16

* SMS programming shows the full SMS string to send. KPX+ and NAVIGATOR programming assumes the panel is already in program mode.

P117E 3E — DAY ZONE FOLLOWER

FACTORY DEFAULT
OFF: No Day Zone Follower.

NOTES
Day zone outputs are turned off when the panel is in Home or Area modes.

When enabled, this option allows Day zones to appear on the Zone Outputs.

In Day mode the Zone Output will follow the state of any active Day zone. This occurs independently of the Program Zone selections P118E (Output Expander Zone Follower) and P119E (Output Expander Zone Latch).

P117E 4E — OUTPUT EXCLUDE

FACTORY DEFAULT
OFF: No Output Exclude.

When enabled, this option allows zones selected for Manual Exclusion (not Auto Exclusion) to also Exclude the Expander Zone outputs. With this option ON, and if a zone has been manually excluded then it will not signal an alarm on the Expander.

P117E 5E — ALTERNATE EXPANDER FORMAT C

FACTORY DEFAULT
OFF

NOTES
If P117E 2E is ON, then P117E 5E is ignored

Use this option along with option P117E 2E to configure the output expander outputs as per the output tables.

Three different combinations of outputs are available for either a single or dual output expanders.

P117E 6E — USER CODE TOGGLE OR PULSE

FACTORY DEFAULT
OFF

When enabled, this option changes the User Code 13 to 15 operations to pulse on Radio Key AUX button.

This allows up to three users to remotely control separate access points such as garage doors.

Note that other actions set for the Radio Key AUX button are unchanged.

		ZONES 1–8 **(D8 & D16)**								ZONES 9–16 **(D16)**							
Option No.	Description	**1**	**2**	**3**	**4**	**5**	**6**	**7**	**8**	**9**	**10**	**11**	**12**	**13**	**14**	**15**	**16**
P118E	OUTPUT EXPANDER ZONES																
P119E	OUTPUT EXPANDER ALARM ZONES																

P118E — OUTPUT EXPANDER ZONES

PROGRAM MODE LEVEL
Installer

FACTORY DEFAULT
All OFF: No Output Expander zones.

NOTES
Selecting a zone in both P118 & P119 options effectively gives pulsed outputs whenever that zone alarms.

Select zones that will be output whenever the zone is unsealed. When the zone reseals the output automatically goes off.

Additionally if a zone is also selected in P119 (to zone latch) then an output will only occur whenever a zone is in alarm and is also unsealed. In this case when the zone reseals the output automatically goes off again. A further zone unseal will turn the zone Expander output On again.

KPX+	P118E [Zone Number] E to enable/disable zones
NAVIGATOR	P118E > Select zones
SMS*	P[MasterCode]E P[InstallerCode]E P118E [Zone Number] E

P119E — OUTPUT EXPANDER ALARM ZONES

PROGRAM MODE LEVEL
Installer

FACTORY DEFAULT
All OFF: No Output Expander Alarm zones.

KPX+ PRO TIP
When selecting zones, MEMORY E selects all, 0 E deselects all.

This selects the zones that will be output whenever the zone is latched into alarm. The output goes off only when the alarm system is reset.

Additionally if a zone is also selected in P118 (to zone follow) then an output will only occur whenever a zone is in alarm and is also unsealed. (See P118 above).

KPX+	P119E [Zone Number] E to enable/disable zones
NAVIGATOR	P119E > Select zones
SMS*	P[MasterCode]E P[InstallerCode]E P119E [Zone Number] E

* SMS programming shows the full SMS string to send. KPX+ and NAVIGATOR programming assumes the panel is already in program mode.

Option No.		Description	Default
P120E	1E	Latched keyswitch input	OFF
	2E	Siren Chirp on Home Arming by Radio	OFF
	3E	Radio Key AUX arms Home Mode	OFF
	4E	Keyswitch DISARM only	OFF
	5E	Keyswitch ARM only	OFF
	6E	Smart Beep	OFF
	7E	Entry Delay Extender	OFF
	8E	Area2 Disarm by Keyswitch Allowed	OFF

P120E 1E — LATCHED KEYSWITCH

PROGRAM MODE LEVEL
Installer

FACTORY DEFAULT
OFF

RELATED OPTIONS
P60E 2E, 3E Keyswitch options.

This option enables the use of a latched, (2 position on/off), keyswitch. Keyswitch operation must first be enabled using options P60E 2E, 3E, page 33.

Note: Enabling Latched keyswitch disables all other methods of arming and disarming (keypad, radio key, card).

KPX+	P120E 1E to enable/disable the option
NAVIGATOR	P120E > enable/disable 1E
SMS*	P[MasterCode]E P[InstallerCode]E P120E 1E

P120E 2E — SIREN CHIRP ON HOME ARMING BY RADIO

PROGRAM MODE LEVEL
Installer

FACTORY DEFAULT
OFF

NOTE
This option enables Radio Key Home Arming chirps regardless of the state of P64E 4E (Radio Key siren chirps).

RELATED OPTIONS
P64E 6E Strobe Flash on Home Arming by Radio.

This option enables siren chirps when arming and disarming Home Mode with a Radio Key.

KPX+	P120E 2E to enable/disable the option
NAVIGATOR	P120E > enable/disable 2E
SMS*	P[MasterCode]E P[InstallerCode]E P120E 2E

P120E 3E — RADIO AUX BUTTON ARMS HOME MODE

PROGRAM MODE LEVEL
Installer

FACTORY DEFAULT
OFF

NOTE
This option also enables Radio Key Home Arming chirps regardless of the state of P64E 4E (Radio Key siren chirps).

RELATED OPTIONS
P69E 5E Radio key Home arm by ON/OFF buttons.

This option enables the AUX button on a Ness RK4 Radio Key to arm Home Mode.

When this option is enabled, options P122E 3E & 4E will be disabled, (AUX button to Aux2 options. See page 65).

(This option is independent of P69E 5E, Home arming by radio key ON/OFF buttons).

KPX+	P120E 3E to enable/disable the option
NAVIGATOR	P120E > enable/disable 3E
SMS*	P[MasterCode]E P[InstallerCode]E P120E 3E

P120E 4E — KEYSWITCH DISARM ONLY

PROGRAM MODE LEVEL
Installer

FACTORY DEFAULT
OFF

RELATED OPTIONS
P120E 1E Latched Keyswitch.
P60E 2E, 3E Keyswitch options

Converts the use of keyswitch operation using P60E 2E and 3E to only Disarm either from Area or Home mode. Keyswitch operation must first be enabled using options P60E 2E, 3E, page 33.

KPX+	P120E 4E to enable/disable the option
NAVIGATOR	P120E > enable/disable 4E
SMS*	P[MasterCode]E P[InstallerCode]E P120E 4E

* SMS programming shows the full SMS string to send. KPX+ and NAVIGATOR programming assumes the panel is already in program mode.

P120E 5E — KEYSWITCH ARM ONLY

PROGRAM MODE LEVEL
Installer

FACTORY DEFAULT
OFF

RELATED OPTIONS
P120E 1E Latched Keyswitch.
P60E 2E, 3E Keyswitch options

Converts the use of keyswitch operation using P60E 2E and 3E to only arm either from Area or Home mode. Keyswitch operation must first be enabled using options P60E 2E, 3E, page 33.

KPX+	P120E 5E to enable/disable the option
NAVIGATOR	P120E > enable/disable 5E
SMS*	P[MasterCode]E P[InstallerCode]E P120E 5E

P120E 6E — SMART BEEPS

PROGRAM MODE LEVEL
Installer

FACTORY DEFAULT
OFF

NOTES
• The zone causing the event is saved and can be identified by viewing MEMORY. Only one of the same consecutive zone warnings is saved, although the MEMORY display will flash each time (unless disabled by P94E option).
• Smart Beeps work in addition to any other outputs mapped to Home and Day alarms, as programmed by options P63E 1E–8E.
• Smart Beeps work in conjunction with any other Home and Day mode outputs, (as set by options P63E 1E–8E).

Smart Beeps are available in Brief Home or Brief Day mode to identify zones by keypad beeps.

When a Home zone or Day zone is triggered, the zone number is slowly beeped out, followed by 2 seconds of silence. This is repeated 3 times and can be stopped by another beep (such as keypress).

If the zone has entry delay you will hear the Smart Beeps sequence once when the zone is triggered and again at the end of entry delay. If Entry Beeps are disabled (P60E 1E), Smart Beeps will only be heard at the end of entry delay.

Smart Beeps use the keypad/s onboard sonalert, so option P63E 3E and/or 7E must be on to enable the sonalert output for Home alarms and Day alarms.

KPX+	P120E 6E to enable/disable the option
NAVIGATOR	P120E > enable/disable 6E
SMS*	P[MasterCode]E P[InstallerCode]E P120E 6E

P120E 7E — ENTRY DELAY EXTENDER

PROGRAM MODE LEVEL
Installer

FACTORY DEFAULT
OFF

RELATED OPTIONS
P26E Entry Delay Time1.

When enabled, this option increases the Entry Delay Time1 by a factor of 10. Example, if P26E is programmed for 30 sec, it becomes 300 sec. (Entry Delay Time2 is unaffected).

KPX+	P120E 7E to enable/disable the option
NAVIGATOR	P120E > enable/disable 7E
SMS*	P[MasterCode]E P[InstallerCode]E P120E 7E

P120E 8E — AREA2 DISARM BY KEYSWITCH ALLOWED

PROGRAM MODE LEVEL
Installer

FACTORY DEFAULT
OFF

RELATED OPTIONS
P60E 2E, 3E. P120E 1E, 4E, 5E

This option allows the keyswitch (if enabled) to disarm Area2. Note, the keyswitch cannot arm Area2, only disarm. Though it can both arm & disarm Area1.

KPX+	P120E 8E to enable/disable the option
NAVIGATOR	P120E > enable/disable 8E
SMS*	P[MasterCode]E P[InstallerCode]E P120E 8E

* SMS programming shows the full SMS string to send. KPX+ and NAVIGATOR programming assumes the panel is already in program mode.

AUX1 OUTPUT OPTIONS

Only one of the P121E options may be selected.

Option No.		Description	Default
P121E	1E	Zone alarms to AUX1 (P58E selects zones)	ON
	2E	Zone Supervision alarms to AUX1	OFF
	3E	Radio key Panic TOGGLE	OFF
	4E	Radio key Panic PULSE	OFF
	5E	[not used]	OFF
	6E	[not used]	OFF
	7E	Door Open Too Long (DOTL) alarm to AUX1	OFF
	8E	Reader [x] output pulses AUX1	OFF

Any or all of the P141E options may be selected.

Option No.		Description	Default
P141E	1E	Area 1 Armed to AUX1	OFF
	2E	Area 2 Armed to AUX1	OFF
	3E	Home Armed to AUX1	OFF
	4E	Keypad toggle AUX1	OFF
	5E	[not used]	OFF
	6E	[not used]	OFF
	7E	[not used]	OFF
	8E	Pulse AUX1	OFF

P121E — AUX1 OPTIONS 1E - 8E

PROGRAM MODE LEVEL
Installer

FACTORY DEFAULT
1E on.

NOTES
Only one option can be on. Turning an option on turns off another.

RELATED OPTIONS
P141E 1E-8E, P354E 5E-6E, P359E 5E-6E, P364E 5E-6E, P369E 5E-6E

Enable or disable P121E 1E to 8E as required. Only one option can be on.

KPX+	P121E 1E - 8E to enable/disable the option as required
NAVIGATOR	P121E > enable/disable 1E - 8E as required
SMS*	P[MasterCode]E P[InstallerCode]E P121E [1E -8E] as required

P121E 1E — ZONE ALARMS TO AUX1

RELATED OPTIONS
P58E Aux1,3 zones

With this option ON, zones selected in P58E will turn on Aux1 when they go into alarm. The Aux1 output turns off when the panel is disarmed/reset.

P121E 2E — ZONE SUPERVISION ALARMS TO AUX1

RELATED OPTIONS
P65E, P66E, P67E Radio Supervision

With this option ON, the AUX1 output will turn on when a SUPERVISED RADIO alarm is triggered. The Aux1 output turns off when the panel is disarmed/reset.

P121E 3E — ENABLE AUX1 FOR AUTOTIMER / RADIO KEY PANIC TOGGLES AUX1

NOTES
When this option is on, Radio Key Panic buttons will no longer sound alarms or report alarms by communicator.

RELATED OPTIONS
P350E to P369E. AutoTimers 1 to 4.

Dual action programming option.

When this option is on, AUX1 is enabled for use by AutoTimer and Radio Key/s Panic button will TOGGLE the Aux1 output.

P121E 4E — RADIO KEY PANIC PULSES AUX1

NOTES
When this option is on, Radio Key Panic buttons will no longer sound alarms or report alarms by communicator.

RELATED OPTIONS
P145E AUX1 Timer

When this option is on, Radio Key/s Panic button will PULSE the Aux1 output.

P121E 7E — DOOR OPEN TOO LONG (DOTL) ALERTS TO AUX1

RELATED OPTIONS
P303E DOTL zones.
P304E DOTL timer.

This option enables DOTL zones (P303E) to turn on Aux1 when the DOTL Time (P304E) expires.

P121E 8E — READER PULSES AUX1

RELATED OPTIONS
P318E, P328E, P338E, P319E, P329E, P339E.

This option enables an access control reader to pulse Aux1 when a valid access card is presented. Set the reader using P318E, P328E or P338E.

* SMS programming shows the full SMS string to send. KPX+ and NAVIGATOR programming assumes the panel is already in program mode.

AUX1 OUTPUT OPTIONS

P141E — ENHANCED AUX1 OPTIONS

PROGRAM MODE LEVEL
Installer

FACTORY DEFAULT
All off.

NOTES
Any or all options may be selected on.

Enable or disable P141E 1E to 8E as required. Multiple options can be selected.

KPX+	P141E 1E - 8E to enable/disable the option as required
NAVIGATOR	P141E > enable/disable 1E - 8E as required
SMS*	P[MasterCode]E P[InstallerCode]E P141E [1E -8E] as required

P141E 1E — AREA 1 ARMED TO AUX1

Turns on AUX1 while Area 1 is armed.

P141E 2E — AREA 2 ARMED TO AUX1

Turns on AUX1 while Area 2 is armed.

P141E 3E — HOME ARMED TO AUX1

Turns on AUX1 while armed in Home mode.

P141E 4E — KEYPAD TOGGLE AUX1

Applies to KPX+ Keypad and Saturn Keypad.
When this option is on,
AUX1 is turned ON or PULSED with the keypress 11* (* = Left hand STAR button).
AUX1 is turned OFF with the keypress 11# (# = Right hand STAR button).

P141E 8E — PULSE AUX1

RELATED OPTIONS
P145E, AUX1 Pulse Time.

P141E 4E must also be ON for this option to work

This option converts the P121E 1E and the P141E 1E, 2E, 3E, 4E, 5E options into a pulsed AUX1 output.
AUX1 is pulsed on for the time set in P145E.

Option No.	Description	Default	Note
P145E	AUX1 TIMER	20 sec	1 to 99 seconds

P145E — AUX1 TIMER

PROGRAM MODE LEVEL
Installer

FACTORY DEFAULT
20 sec.

RELATED OPTIONS
P141E 8E

Sets the length of pulse time for the AUX1 output when the P141E 8E option is selected. Select 1 to 99 seconds.

KPX+	P145E [New Time] E
NAVIGATOR	P145E > [New Time] E
SMS*	P[MasterCode]E P[InstallerCode]E P145E [NewTime] E

* SMS programming shows the full SMS string to send. KPX+ and NAVIGATOR programming assumes the panel is already in program mode.

AUX2 OUTPUT OPTIONS

Only one of the P122E options may be selected.

Option No.		Description	Default
P122E	1E	Zone alarms to Aux2	ON
	2E	Zone Supervision alarms to Aux2	OFF
	3E	AutoTimer + R/Key Panic TOGGLES Aux2	OFF
	4E	Radio Key AUX button Pulses Aux2	OFF
	5E	[not used]	OFF
	6E	[not used]	OFF
	7E	DOTL alerts to Aux2	OFF
	8E	Reader output pulses Aux2	OFF

Any or all of the P142E options may be selected.

Option No.		Description	Default
P142E	1E	Area1 Armed to AUX2	OFF
	2E	Area2 Armed to AUX2	OFF
	3E	Home Mode arm to AUX2	OFF
	4E	Keypad toggle AUX2	OFF
	5E	[not used]	OFF
	6E	[not used]	OFF
	7E	[not used]	OFF
	8E	Pulse AUX2	OFF

P122E — AUX2 OPTIONS 1E - 8E

PROGRAM MODE LEVEL
Installer

FACTORY DEFAULT
1E on.

NOTES
Only one option can be on. Turning an option on turns off another.

RELATED OPTIONS
P142E 1E-8E, P354E 7E-8E, P359E 7E-8E, P364E 7E-8E, P369E 7E-8E

P122E is one of several options which control the behaviour of the AUX2 output.

One of the most powerful features of the D8XCEL/D16XCEL panels is the flexibility to control the AUX outputs by various events and alarms. If the AUX2 output does not behave as expected, please check all related options such as AutoTimers and P142E options.

Enable or disable P122E 1E to 8E as required. Only one option can be on.

KPX+	P122E 1E - 8E to enable/disable the option as required
NAVIGATOR	P122E > enable/disable 1E - 8E as required
SMS*	P[MasterCode]E P[InstallerCode]E P122E [1E -8E] as required

P122E 1E — ZONE ALARMS TO AUX2

RELATED OPTIONS
P59E Aux2 zones.

With this option ON, zones selected in P59E will turn on Aux2 when they go into alarm. The Aux2 output turns off when the panel is disarmed/reset.

P122E 2E — ZONE SUPERVISION ALARMS TO AUX2

RELATED OPTIONS
P65E, P66E, P67E Radio Supervision.

Setting this option turns the AUX2 output ON when a SUPERVISED RADIO alarm is triggered. The Aux2 output turns off when the panel is disarmed/reset.

P122E 3E — ENABLE AUX2 FOR AUTOTIMER / RADIO KEY AUX TOGGLES AUX2

RELATED OPTIONS
P350E to P369E. AutoTimers 1 to 4.

Dual action programming option.

When this option is on, AUX2 is enabled for use by AutoTimer and Radio Key/s AUX button will TOGGLE the AUX2 output.

P122E 4E — RADIO KEY AUX BUTTON PULSE AUX2

RELATED OPTIONS
P146E AUX2 Timer

When this option is on, Radio Key/s AUX button button will PULSE the Aux2 output.

P122E 7E — DOOR OPEN TOO LONG (DOTL) ALERTS TO AUX2

RELATED OPTIONS
P303E DOTL zones.
P304E DOTL timer.

This option enables DOTL zones (P303E) to turn on AUX2 when the DOTL Time (P304E) expires.

P122E 8E — READER OUTPUT TO AUX2

RELATED OPTIONS
P318E, P328E, P338E, P319E, P329E, P339E.

This option enables an access control reader to pulse Aux2 when a valid access card is presented. Set the reader using P318E, P328E or P338E.

* SMS programming shows the full SMS string to send. KPX+ and NAVIGATOR programming assumes the panel is already in program mode.

AUX2 OUTPUT OPTIONS

P142E	ENHANCED AUX2 OPTIONS
PROGRAM MODE LEVEL Installer **FACTORY DEFAULT** All off. **NOTES** Any or all options may be selected on.	The P142E enhanced AUX2 options work along with P122E and AutoTimers to provide multiple choices of events and alarms to control AUX2. KPX+: P141E 1E - 8E to enable/disable the option as required NAVIGATOR: P141E > enable/disable 1E - 8E as required SMS*: P[MasterCode]E P[InstallerCode]E P141E [1E -8E] as required
P142E 1E	**AREA1 ARMED TO AUX2**
	Turns on AUX2 while Area 1 is armed.
P142E 2E	**AREA2 ARMED TO AUX2**
	Turns on AUX2 while Area 2 is armed.
P142E 3E	**HOME ARMED TO AUX2**
	Turns on AUX2 while armed in Home mode.
P142E 4E	**KEYPAD TOGGLE AUX2**
	Applies to KPX+ Keypad and Saturn Keypad. When this option is on, AUX2 is turned ON or PULSED with the keypress 22* (* = Left hand STAR button). AUX2 is turned OFF with the keypress 22# (# = Right hand STAR button).
P142E 8E	**PULSE AUX2**
RELATED OPTIONS P146E, AUX2 Pulse Time. **P142E 4E must also be ON for this option to work**	This option converts the P122E 1E and the P142E 1E, 2E, 3E, 4E, 5E options into a pulsed AUX2 output. AUX2 is pulsed on for the time set in P146E.

Option No.	Description	Default	Note
P146E	AUX2 TIMER	20 sec	1 to 99 seconds

P146E	AUX2 TIMER
PROGRAM MODE LEVEL Installer **FACTORY DEFAULT** 20 sec. **RELATED OPTIONS** P142E 8E	Sets the length of pulse time for the AUX2 output when the P142E 8E option is selected. Select 1 to 99 seconds. KPX+: P146E [New Time] E NAVIGATOR: P146E > [New Time] E SMS*: P[MasterCode]E P[InstallerCode]E P146E [NewTime] E

* SMS programming shows the full SMS string to send. KPX+ and NAVIGATOR programming assumes the panel is already in program mode.

AUX3 OUTPUT OPTIONS

Only one of the P123E options may be selected.

Option No.		Description	Default
P123E	1E	Zone Alarms to AUX3	OFF
	2E	[not used]	OFF
	3E	Enable AUX3 for AutoTimer	OFF
	4E	Radio Key Panic Pulses AUX3	OFF
	5E	[not used]	OFF
	6E	[not used]	OFF
	7E	[not used]	OFF
	8E	Reader output pulses Aux3	OFF

Any or all of the P143E options may be selected.

Option No.		Description	Default
P143E	1E	Area1 Armed to AUX3	OFF
	2E	Area2 Armed to AUX3	OFF
	3E	Home Mode arm to AUX3	OFF
	4E	Keypad toggle AUX3	OFF
	5E	[not used]	OFF
	6E	[not used]	OFF
	7E	[not used]	OFF
	8E	Pulse AUX3	OFF

P123E — AUX3 OPTIONS 1E - 8E

PROGRAM MODE LEVEL
Installer

FACTORY DEFAULT
1E on.

NOTES
Only one option can be on. Turning an option on turns off another.

RELATED OPTIONS
P143E 1E-8E Enhanced AUX3 options.
P374E 5E-6E AutoTimer1 AUX3 options.
P379E 5E-6E AutoTimer2 AUX3 options.
P384E 5E-6E AutoTimer3 AUX3 options.
P389E 5E-6E AutoTimer4 AUX3 options.

P123E is one of several options which control the behaviour of the AUX3 output.

Enable or disable P123E 1E to 8E as required. Only one option can be on.

KPX+	P123E 1E - 8E to enable/disable the option as required
NAVIGATOR	P123E > enable/disable 1E - 8E as required
SMS*	P[MasterCode]E P[InstallerCode]E P123E [1E -8E] as required

P123E 1E — ZONE ALARMS TO AUX3

RELATED OPTIONS
P58E Aux1,3 zones.
P121E 1E Zone Alarms to AUX1.

With this option ON, zones selected in P58E will turn on Aux3 when they go into alarm. The Aux3 output turns off when the panel is disarmed/reset.

P123E 3E — ENABLE AUX3 FOR AUTOTIMER

RELATED OPTIONS
P370E to P389E. AutoTimers

When this option is on, AUX3 is enabled for use by AutoTimer.

P123E 4E — RADIO KEY PANIC PULSES AUX3

NOTES
When this option is on, Radio Key Panic buttons will no longer sound alarms or report alarms by communicator.

RELATED OPTIONS
P147E AUX3 Timer

When this option is on, Radio Key/s Panic button will PULSE the Aux3 output.

Note that P121E 4E (Radio Key Panic Pulses AUX1) over-rides this option.

P123E 8E — READER OUTPUT TO AUX3

RELATED OPTIONS
P318E, P328E, P338E, P319E, P329E, P339E.

This option enables an access control reader to pulse Aux3 when a valid access card is presented. Set the reader using P318E, P328E or P338E.

* SMS programming shows the full SMS string to send. KPX+ and NAVIGATOR programming assumes the panel is already in program mode.

AUX3 OUTPUT OPTIONS

P143E	ENHANCED AUX3 OPTIONS
PROGRAM MODE LEVEL Installer **FACTORY DEFAULT** All off. **NOTES** Any or all options may be selected on.	The P143E enhanced AUX3 options work along with P123E and AutoTimers to provide multiple choices of events and alarms to control AUX3. KPX+: P143E 1E - 8E to enable/disable the option as required NAVIGATOR: P143E > enable/disable 1E - 8E as required SMS*: P[MasterCode]E P[InstallerCode]E P143E [1E -8E] as required
P143E 1E	**AREA1 ARMED TO AUX3**
	Turns on AUX3 while Area 1 is armed.
P143E 2E	**AREA2 ARMED TO AUX3**
	Turns on AUX3 while Area 2 is armed.
P143E 3E	**HOME ARMED TO AUX3**
	Turns on AUX3 while armed in Home mode.
P143E 4E	**KEYPAD TOGGLE AUX3**
	Applies to KPX+ Keypad and Saturn Keypad. When this option is on, AUX3 is turned ON or PULSED with the keypress 33* (* = Left hand STAR button). AUX3 is turned OFF with the keypress 33# (# = Right hand STAR button).
P143E 8E	**PULSE AUX3**
RELATED OPTIONS P147E, AUX3 Pulse Time. **P143E 4E must also be ON for this option to work**	This option converts the P143E 1E, 2E, 3E, 4E, 5E options into a pulsed AUX3 output. AUX3 is pulsed on for the time set in P147E.

Option No.	Description	Default	Note
P147E	AUX3 TIMER	20 sec	1 to 99 seconds

P147E	AUX3 TIMER
PROGRAM MODE LEVEL Installer **FACTORY DEFAULT** 20 sec. **RELATED OPTIONS** P143E 8E	Sets the length of pulse time for the AUX3 output when the P143E 8E option is selected. Select 1 to 99 seconds. KPX+: P147E [New Time] E NAVIGATOR: P147E > [New Time] E SMS*: P[MasterCode]E P[InstallerCode]E P147E [NewTime] E

* SMS programming shows the full SMS string to send. KPX+ and NAVIGATOR programming assumes the panel is already in program mode.

AUX4 OUTPUT OPTIONS

Only one of the P124E options may be selected.

Option No.		Description	Default
P124E	1E	Zone Alarms to AUX4	OFF
	2E	Enable Extension Sonalert	OFF
	3E	Enable AUX4 for AutoTimer	OFF
	4E	Radio Key AUX Pulses AUX4	OFF
	5E	Enable AUX4 Fail To Communicate Output	OFF
	6E	[not used]	OFF
	7E	[not used]	OFF
	8E	Reader output pulses AUX4	OFF

Any or all of the P144E options may be selected.

Option No.		Description	Default
P144E	1E	Area1 Armed to AUX4	OFF
	2E	Area2 Armed to AUX4	OFF
	3E	Home Mode arm to AUX4	OFF
	4E	Keypad toggle AUX4	OFF
	5E	[not used]	OFF
	6E	[not used]	OFF
	7E	[not used]	OFF
	8E	Pulse AUX4	OFF

P124E — AUX4 OPTIONS 1E - 8E

PROGRAM MODE LEVEL
Installer

FACTORY DEFAULT
1E on.

NOTES
Only one option can be on. Turning an option on turns off another.

RELATED OPTIONS
P144E 1E-8E Enhanced AUX4 options.
P374E 7E-8E AutoTimer1 AUX4 options.
P379E 7E-8E AutoTimer2 AUX4 options.
P384E 7E-8E AutoTimer3 AUX4 options.
P389E 7E-8E AutoTimer4 AUX4 options.

P124E is one of several options which control the behaviour of the AUX4 output.

Enable or disable P124E 1E to 8E as required. Only one option can be on.

KPX+	P124E 1E - 8E to enable/disable the option as required
NAVIGATOR	P124E > enable/disable 1E - 8E as required
SMS*	P[MasterCode]E P[InstallerCode]E P124E [1E -8E] as required

P124E 1E — ZONE ALARMS TO AUX4

RELATED OPTIONS
P59E Aux2/4 zones.
P122E 1E Zone Alarms to AUX2

With this option ON, zones selected in P59E will turn on Aux4 when they go into alarm. The Aux4 output turns off when the panel is disarmed/reset.

P124E 2E — ENABLE EXTENSION SONALERT

NOTES
A standard 12V sonalert or other low current sounder can be used as the extension beeper.

Enables the Aux4 output to duplicate all keypad beeps including keypress beeps. This is useful in cases where, for example, entry beeps or other keypad beeps need to be heard in more than one location on the premises. (Adding an additional keypad would also achieve the same result).

P124E 3E — ENABLE AUX4 FOR AUTOTIMER

RELATED OPTIONS
P370E to P389E. AutoTimers.

When this option is on, AUX4 is enabled for use by AutoTimer.

P124E 4E — RADIO KEY AUX PULSES AUX4

RELATED OPTIONS
P148E AUX4 Timer

When this option is on, Radio Key/s AUX button will PULSE the Aux4 output.

P124E 5E — ENABLE AUX4 FAIL TO COMMUNICATE OUTPUT

RELATED OPTIONS
P370E to P389E. AutoTimers.

When this option is enabled AUX4 will turn on at the start of the fourth dialout attempt. This can be used as Fail To Communicate output to trigger backup communications devices such as GSM. The AUX4 output is automatically turned off on the next successful communication attempt or when the panel is next disarmed.

P124E 8E — READER OUTPUT TO AUX4

RELATED OPTIONS
P318E, P328E, P338E, P319E, P329E, P339E.

This option enables an access control reader to pulse AUX4 when a valid access card is presented. Set the reader using P318E, P328E or P338E.

* SMS programming shows the full SMS string to send. KPX+ and NAVIGATOR programming assumes the panel is already in program mode.

AUX4 OUTPUT OPTIONS

P144E	ENHANCED AUX4 OPTIONS
PROGRAM MODE LEVEL Installer **FACTORY DEFAULT** All off. **NOTES** Any or all options may be selected on.	The P144E enhanced AUX4 options work along with P124E and AutoTimers to provide multiple choices of events and alarms to control AUX4. KPX+: P144E 1E - 8E to enable/disable the option as required NAVIGATOR: P144E > enable/disable 1E - 8E as required SMS*: P[MasterCode]E P[InstallerCode]E P144E [1E -8E] as required
P144E 1E	**AREA1 ARMED TO AUX4**
	Turns on AUX4 while Area 1 is armed.
P144E 2E	**AREA2 ARMED TO AUX4**
	Turns on AUX4 while Area 2 is armed.
P144E 3E	**HOME ARMED TO AUX4**
	Turns on AUX4 while armed in Home mode.
P144E 4E	**KEYPAD TOGGLE AUX4**
	When this option is on, AUX4 is turned ON or PULSED with the keypress 44* (* = Left hand STAR button). AUX4 is turned OFF with the keypress 44# (# = Right hand STAR button).
P144E 8E	**PULSE AUX4**
RELATED OPTIONS P148E, AUX4 Pulse Time. **P144E 4E must also be ON for this option to work**	This option converts the P144E 1E, 2E, 3E, 4E, 5E options into a pulsed AUX4 output. AUX4 is pulsed on for the time set in P148E.

Option No.	Description	Default	Note
P148E	AUX4 TIMER	20 sec	1 to 99 seconds

P148E	AUX4 TIMER
PROGRAM MODE LEVEL Installer **FACTORY DEFAULT** 20 sec. **RELATED OPTIONS** P144E 8E	Sets the length of pulse time for the AUX4 output when the P144E 8E option is selected. Select 1 to 99 seconds. KPX+: P148E [New Time] E NAVIGATOR: P148E > [New Time] E SMS*: P[MasterCode]E P[InstallerCode]E P148E [NewTime] E

WIRING EXAMPLES

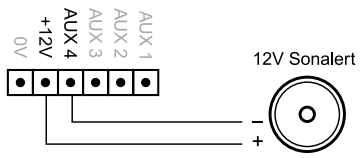

Aux4 driving an extension sonalert. See P124E 2E.

Use the optional 106-013 Relay Board

AUX5, AUX6, AUX7, AUX8 OUTPUT OPTIONS

Option No.		Description	Default
P151E	1E	[not used]	OFF
or	2E	[not used]	OFF
P152E	3E	[not used]	OFF
P153E	4E	Keypad toggle AUX5	OFF
P154E	5E	[not used]	OFF
	6E	[not used]	OFF
	7E	Reader Output to AUX5	OFF
	8E	Pulse AUX5	OFF

P151E — AUX5 OPTIONS

PROGRAM MODE LEVEL
Installer

FACTORY DEFAULT
As per table

When this option is on, AUX5 (on the Output Expander/s) is turned ON or PULSED using the Auxiliary Control menu on the Ness Navigator touch screen keypad.

KPX+	P151E 1E - 8E to enable/disable the option as required
NAVIGATOR	P151E > enable/disable 1E - 8E as required
SMS*	P[MasterCode]E P[InstallerCode]E P151E [1E -8E] as required

P151E 4E — KEYPAD TOGGLE AUX5

When this option is on, AUX5 (on the Output Expander/s) is turned ON or PULSED using the Auxiliary Control menu on the Ness Navigator touch screen keypad.

P151E 7E — READER OUTPUT TO AUX5

FACTORY DEFAULT
OFF

RELATED OPTIONS
P318E, P328E, P338E, P319E, P329E, P339E

This option enables an access control reader to pulse AUX5 when a valid access card is presented. Set the reader using P318E, P328E or P338E.

P151E 8E — PULSE AUX5

RELATED OPTIONS
P318E, P328E, P338E, P319E, P329E, P339E.

This option sets AUX5 to Pulse (momentary output) for any action that triggers AUX5 inckuding keypad operation (see P151E 4E). Set the pulse on time using P155E.

Option No.	Description	Default	Note
P155E	AUX5 TIMER	20 sec	1 to 99 seconds
P156E	AUX6 TIMER	20 sec	1 to 99 seconds
P157E	AUX7 TIMER	20 sec	1 to 99 seconds
P158E	AUX8 TIMER	20 sec	1 to 99 seconds

P155E, P156E, P157E, P158E — AUX5 – AUX8 TIMERS

PROGRAM MODE LEVEL
Installer

FACTORY DEFAULT
20 sec.

RELATED OPTIONS
P151E 8E Pulse AUX5
P152E 8E Pulse AUX6
P153E 8E Pulse AUX7
P154E 8E Pulse AUX8

Sets the length of pulse time for the AUX5 – AUX8 outputs when the outputs are set for Pulse mode. Select 1 to 99 seconds.

KPX+	PxxxE [New Time] E
NAVIGATOR	PxxxE > [New Time] E
SMS*	P[MasterCode]E P[InstallerCode]E PxxxE [NewTime] E

* SMS programming shows the full SMS string to send. KPX+ and NAVIGATOR programming assumes the panel is already in program mode.

Option No.	Description	Default	Note
P160E	ALARM SIREN VOLUME	99	1 to 99 levels
P161E	FIRE SIREN VOLUME	99	1 to 99 levels
P162E	CHIRP SIREN VOLUME	16	1 to 99 levels

P160E — ALARM SIREN VOLUME

PROGRAM MODE LEVEL
Installer

FACTORY DEFAULT
Level 99 (highest)

Sets the Audible Alarm volume level for the Siren output.
Select volume from 1 (lowest) to 99 (highest).

KPX+	P160E [New Value] E
NAVIGATOR	P160E > [New Value] E
SMS*	P[MasterCode]E P[InstallerCode]E P160E [NewValue] E

P161E — FIRE SIREN VOLUME

PROGRAM MODE LEVEL
Installer

FACTORY DEFAULT
Level 99 (highest)

Sets the Fire Alarm volume level for the Siren output.
Select volume from 1 (lowest) to 99 (highest).

KPX+	P161E [New Value] E
NAVIGATOR	P161E > [New Value] E
SMS*	P[MasterCode]E P[InstallerCode]E P161E [NewValue] E

P162E — CHIRP SIREN VOLUME

PROGRAM MODE LEVEL
Installer

FACTORY DEFAULT
Level 16 (low volume)

Sets the Chirp volume level for the Siren output.
Select volume from 1 (lowest) to 99 (highest).

KPX+	P162E [New Value] E
NAVIGATOR	P162E > [New Value] E
SMS*	P[MasterCode]E P[InstallerCode]E P162E [NewValue] E

		ZONES 1–8 **(D8 & D16)**								ZONES 9–16 **(D16)**							
Option No.	Description	**1**	**2**	**3**	**4**	**5**	**6**	**7**	**8**	**9**	**10**	**11**	**12**	**13**	**14**	**15**	**16**
P125E	ENABLE HARDWIRED ZONES	ON	ON	ON	ON	ON	ON	ON	ON	ON	ON	ON	ON	ON	ON	ON	ON

P125E — ENABLE HARDWIRED ZONES

PROGRAM MODE LEVEL
Installer

FACTORY DEFAULT
All on.

NOTES
THIS OPTION APPLIES ONLY TO WIRED ZONES AND HAS NO EFFECT ON RADIO ZONES.

KPX+ PRO TIP
When selecting zones, MEMORY E selects all, 0 E deselects all.

This option allows hardwired zone inputs to be enabled or disabled.
Disabled zones are ignored and do not need to be terminated with end of line resistors.
This option has no effect on radio zones.

KPX+	P125E [Zone Number] E to enable/disable zones
NAVIGATOR	P125E > Select zones
SMS*	P[MasterCode]E P[InstallerCode]E P125E [Zone Number] E

* SMS programming shows the full SMS string to send. KPX+ and NAVIGATOR programming assumes the panel is already in program mode.

P126E	1E	Enable Double key PANIC	ON
	2E	Enable Double key FIRE	OFF
	3E	Enable Double key MEDICAL & Nav MEDICAL	OFF
	4E	Enable Entry Chime, DAY Mode	OFF
	5E	Enable Entry Chime, HOME Mode	OFF
	8E	Disable One Digit At A Time display	ON

P126E

MISC KEYPAD OPTIONS

PROGRAM MODE LEVEL
Installer

FACTORY DEFAULT
1E on. Double key Panic enabled.
2E – 5E off.
8E on.

NOTES
• One or all options can be enabled.
• To operate KPX/Saturn double key functions - in normal operating mode press and hold the matching keys for at least 1.5sec.

Various programming options for Ness KPX+, Saturn and Navigator keypads.

KPX+	P126E xE to enable/disable an option as required
NAVIGATOR	P126E > enable/disable an option as required
SMS*	P[MasterCode]E P[InstallerCode]E P120E 1E

1E KPX & SATURN. Enables double key PANIC. (Both PANIC Keys together)

2E KPX & SATURN. enables double key FIRE. (Both FIRE keys 1, 3, together)

3E KPX & SATURN. Enables double key MEDICAL (Both MEDICAL keys 4, 6, together) and enables MEDICAL on Navigator.

4E Enables Entry Chime in Day mode. Used to announce entry in Day mode.

5E Enable Chime in Home Mode. Used to announce entry in Home mode.

8E Disable One Digit At A Time Display. This allows Navigator keypads to immediately display numeric options.

P129E	1E	0k EOL resistors	OFF
	2E	1k EOL resistors	OFF
	3E	1.5k EOL resistors	OFF
	4E	2.2k EOL resistors	ON
	5E	3.3k EOL resistors	OFF
	6E	3.9k EOL resistors	OFF
	7E	4.7k EOL resistors	OFF
	8E	5.6k EOL resistors	OFF
	9E	6.8k EOL resistors	OFF
	10E	8.2k EOL resistors	OFF
	11E	10k EOL resistors	OFF
	12E	12k EOL resistors	OFF
	13E	22k EOL resistors	OFF

P129E

END OF LINE RESISTOR OPTIONS

PROGRAM MODE LEVEL
Installer

FACTORY DEFAULT
4E, 2.2k

NOTES
• Only one option can be on. Turning an option on turns off another.
• The EOL value selected applies to all zone inputs and the external tamper input, except the keyswitch input which is always 2K2.
• The keyswitch input (if enabled) always uses a 2K2 resistor regardless of the global EOL resistor value set by P129E.
Also see P60E 2E, 3E, page 33.

The End Of Line Resistor value for all zones and the external tamper can be programmed with one of 13 different resistor values.

This allows the panel to be easily retro-fitted into almost any existing installation.

KPX+	P129E xE to select one option as required
NAVIGATOR	P129E > select one option as required
SMS*	P[MasterCode]E P[InstallerCode]E P129E xE

AUTO-TIME FEATURES

D8x/D16x V6 onwards features sophisticated new automation features making full use of the onboard Real Time Clock and a set of powerful yet simple to program options.

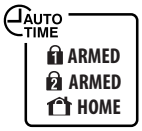

ARM or DISARM AUTOMATICALLY at pre-programmed times of day or day of the week.

This feature can save a site manager many headaches and hours of travel time. There is no need to rely on staff remembering to arm or disarm the system.

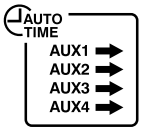

TURN OUTPUTS ON or OFF at pre-programmed times - every day, once a week, anytime. Automate doors, sprinkler systems, lights and more.

ENABLE/DISABLE USER CODES depending on the time of day or day of the week. Allows managers to grant users access to the system at selected times and deny after hours entry.

This applies to keypad codes only, not radio keys or prox fobs.

EXAMPLE 1

AREA 1 to Auto Arm Monday to Friday at 6:30pm with warning beeps 10 minutes prior to the event.

The keypad will start a slow continuous beep at 6:20pm, then at 6:29pm the beeps change to a faster rate for the final minute.

TO SILENCE THE BEEPS during the warning period. Pressing any key on the keypad will stop the beeps on the keypad (and the Reset output) and then start again for the final minute with a slightly faster beep.

TO DELAY ARMING enter a valid user code on its own. (The user code must be assigned to an Area to work). This will turn off the warning beeps and the Auto Arm for 1 hour - when the warning process will start again.

Programming Steps

AutoTimer 1			
P350E		Minutes 0-59	30
P351E		Hours 0-23	18
P352E		Days (1=Sunday)	2, 3, 4, 5, 6
P353E	1E	AREA 1 ARM	ON
	6E	KEYPAD Beeps	ON
	8E	Extend AutoTIME	ON

P390E	AutoTime warning	10

In this example, if reporting to a central station, the arming will be sent as User 91.

EXAMPLE 2

AUX1 turns on for one minute every Saturday at 8pm.

This could be used to turn on sprinkers, a pool or spa pump, lights or anything that can be triggered by a relay output.

(Requires optional 106-013 Four Relay Board).

Programming Steps

AutoTimer 2			
P355E		Minutes 0-59	00
P356E		Hours 0-23	20
P357E		Days (1=Sunday)	7
P359E	6E	AUX1 PULSE	ON

P145E	AUX1 Pulse Time	60

TIP 1. The output can also be pulsed on (or toggled on/off) anytime using the 11 or 11# keypad commands. See page 13.*

TIP 2. For longer periods (up to a week), a pair of AutoTimers can be used - one to turn the AUX ON & the other to turn it OFF.

EXAMPLE 3

User Code 56 is programmed to work only on Monday-Friday between 7am to 5pm.

The user code will be disabled outside of these times. (Applies only to keypad codes. Radio keys and prox fobs will work anytime regardless.)

Programming Steps

Enable Extra Option 9E for user code 56 to enable the user code for use by AutoTime.

EXCLUDE+E toggles Extra Options mode. See page 24.		9E Enable user Code for AutoTime
P256E	User Code 56	ON

AutoTimer 3 Enables the user code.

AutoTimer 3			
P360E		Minutes 0-59	00
P361E		Hours 0-23	07
P362E		Days (1=Sunday)	2, 3, 4, 5, 6
P363E	4E	Code Enable	ON

AutoTimer 4 Disables the code.

AutoTimer 4			
P365E		Minutes 0-59	00
P366E		Hours 0-23	07
P367E		Days (1=Sunday)	2, 3, 4, 5, 6
P368E	5E	Code Disable	ON

The power and flexibility of AutoTime means it has numerous programmable options which makes **NessComms software** the ideal programming tool.

The NessComms graphical user interface makes it easy to program complex options on your PC or laptop. Then simply connect and download.

NessComms makes your life easier! See page 5 for further information.

Auto-Time features depend on the onboard clock being set to the current time and date. If your system has an active SIM card the time is automatically set by the cellular network.

If the panel is being used 'offline' without a SIM card then use options P340-P344E to set the clock, page 75.

Option No.	Description	Default	Note
P340E	REAL TIME CLOCK SET **MINUTES**	00	00–59 minutes
P341E	REAL TIME CLOCK SET **HOURS**	00	00–23 hours (00=midnight)
P342E	REAL TIME CLOCK SET **DAY**	01	01–31 days
P343E	REAL TIME CLOCK SET **MONTH**	01	01–12 months
P344E	REAL TIME CLOCK SET **YEAR**	09	00–63 (2000–2063)

P340 - P344E

REALTIME CLOCK PROGRAMMING

PROGRAM MODE LEVEL
Installer, User

FACTORY DEFAULT
none

NOTES
• The onboard clock is automatically updated from your cellular network. You should only need to adjust clock settings if the panel is being used 'offline' without a SIM card.
• Real Time Clock memory is regularly saved to non-volatile memory and is retained on power down.
You should always check the clock settings on power up and adjust the time and date if necessary.

These options are used to program the time and date into the Realtime Clock (RTC).

KPX+	PxxxE [New Value] E
NAVIGATOR	PxxxE > [New Value] E
SMS*	P[MasterCode]E P[InstallerCode]E PxxxE [NewValue] E

P340E Real Time Clock minutes. Enter a value between 00 and 59. Default 00 minutes.

P341E Real Time Clock Hours. Enter a value between 00 and 23. Default 00 hours.

P342E Real Time Clock Day of the month. Enter a value between 01 and 31. Default 01, (1st day of the month). Ensure that the setting does not exceed the days in the current month. The panel does not cross-check this setting.

P343E Real Time Clock Month. Enter a value between 01 and 12. Default 01, (January).

P344E Real Time Clock Year. Enter a value between 00 and 63. (2000–2063). Default 09, (2009).

P390

AUTOTIME WARNING PERIOD

PROGRAM MODE LEVEL
Installer

FACTORY DEFAULT
5 minutes

NOTES
This option sets the warning period for all AutoTimers.

RELATED OPTIONS
P353E 6E AutoTimer1, keypad beeps
P358E 6E AutoTimer2, keypad beeps
P363E 6E AutoTimer3, keypad beeps
P368E 6E AutoTimer4, keypad beeps
P373E 6E AutoTimer5, keypad beeps
P378E 6E AutoTimer6, keypad beeps
P383E 6E AutoTimer7, keypad beeps
P388E 6E AutoTimer8, keypad beeps

This option enables a keypad beep to warn that an AutoTime action is due to begin.

Set the minutes for the start of the warning period.

The Keypad Beeps option for the required timer/s must also be enabled.

KPX+	P39E [New Value] E
NAVIGATOR	P390E > [New Value] E
SMS*	P[MasterCode]E P[InstallerCode]E P390E [NewValue] E

The allowed range is 1 to 99 minutes.

P392E 1E

ENABLE AUTOTIME USER CODES

PROGRAM MODE LEVEL
Installer

FACTORY DEFAULT
1E OFF

Toggle the current setting for the ENABLING or DISABLING of USER Codes as set by the AutoTIMERS.

If the USER codes are currently DISABLED but the current AutoTIME period means that they should be ENABLED then use this option.

KPX+	P392E 1E to enable/disable the option as required
NAVIGATOR	P392E > enable/disable 1E as required
SMS*	P[MasterCode]E P[InstallerCode]E P392E 1E as required

* SMS programming shows the full SMS string to send. KPX+ and NAVIGATOR programming assumes the panel is already in program mode.

P350 - P354E

PROGRAM MODE LEVEL
Installer

FACTORY DEFAULT
none

RELATED OPTIONS
P121E Enable AUX1 for AutoTimers
P122E Enable AUX2 for AutoTimers
P123E Enable AUX3 for AutoTimers
P124E Enable AUX4 for AutoTimers
P145E AUX1 Pulse Time.
P146E AUX2 Pulse Time.
P147E AUX3 Pulse Time.
P148E AUX4 Pulse Time.
P390E AutoTime Warning.
P392E Enable AutoTime User Codes
P202E - P256E Extra Option 9. Enable user codes for AutoTime.

NOTE 1. Do not use the same AutoTimer to enable and disable user codes. For example, use AutoTimer1 to set the Code Enable time and AutoTimer2 to set the Code Disable Time.
The user codes must also be enabled for AutoTime using Extra Options for user codes.

NOTE 2. If Open/Closing reports are enabled a Closing Extended report (Contact ID 464) is sent to the control room.

NOTE 3. If Open/Closing reports are programmed, user Codes 91 to 98 are used to identify AutoTIME arming and disarming. AutoTime1 is code 91 then consecutively through to AutoTIME 8 is code 98.

NOTE 4. Note that each AutoTimer controls different AUX outputs.

NOTE 5. These instructions cover the programming of AutoTimer1. The programming for AutoTimers 2 to 8 is identical but with a different set of option numbers. See the Options Summary on page 92 for a full list of programming options for each AutoTimer.

HANDY HINT.
There are two ways to turn outputs on by AutoTimer - depending on how long the AUX output is to stay on.
1. If the ON period is less than 20 seconds then the Pulse Output option can be used to get timing periods measured in seconds. This method only requires one AutoTimer to be programmed.
2. For longer periods (up to a week), a pair of AutoTimers can be used - one to turn the AUX ON & the other to turn it OFF.

AUTOTIMER1 / AutoTimers 2-8 NOTE 5

STEP 1
Set the the Time and Day Of The Week at which AutoTimer1 will activate.

KPX+	PxxxE [New Value] E
NAVIGATOR	PxxxE > [New Value] E
SMS*	P[MasterCode]E P[InstallerCode]E PxxxE [NewValue] E

P350E AutoTimer1 Minutes. Enter a value between 00 and 59.
P351E AutoTimer1 Hours. Enter a value between 00 and 23. (00 = Midnight).
P352E AutoTimer1 Day. Enter values between 1 and 7. (1E=Sunday). If the AutoTimer event is intended to take place every day, then enable all days, 1E-7E.

STEP 2
Set the Actions which will take place on the Time and Day set above.

KPX+	PxxxE xE to enable/disable an option as required
NAVIGATOR	PxxxE > enable/disable an option as required
SMS*	P[MasterCode]E P[InstallerCode]E P392E 1E as required

P353E or **P354E**

1E-8E to turn an option ON or OFF. Multiple options can be selected.

TO ENABLE AUTO-ARMING

P353E 1E Area1 Arm. Arms Area1 at the time & day set by AutoTimer1.

P353E 2E Area2 Arm. Arms Area2 at the time & day set by AutoTimer1.

P353E 3E Home Arm. Arms Home Mode at the time & day set by AutoTimer1.

Note. Option 3E enables Home Arm for AutoTimers 1 to 6 but enables Day Mode Arm for AutoTimers 7 and 8.

TO ENABLE/DISABLE USER CODES BY AUTOTIMER NOTE 1

P353E 4E Code Enable. User Codes enabled for AutoTime become active from the time set above. CODE ENABLE/DISABLE allows a period to be set on selected days of the week during which selected user codes can be used. Outside this period the codes will not work.

P353E 5E Code Disable. User Codes enabled for AutoTime are disabled at the time set above.

TO ENABLE PRE-EVENT WARNING BEEPS

P353E 6E Keypad Beeps. Turn this option on to enable the AutoTimer Warning (continuous slow beeps). The keypad/s will beep to warn that this AutoTimer is about to begin. Keypad beeps begin xx minutes before the AutoTimer is due to start as set by option P390E.

1. To **silence the beeps** during the warning period. Pressing any key on the keypad will stop the beeps on the keypad (and the Reset output) and then start again for the final minute with a slightly faster beep.
2. To **delay the AutoTime event**, enter a valid user code on its own. (The user code must be assigned to an Area to work). This will turn off the warning beeps and the Auto Arm for 1 hour - when the warning process will start again.

P353E 7E Reset Output Beeps. If 6E is ON, then this option also beeps the RESET output for a much louder AutoTimer warning if required.

P353E 8E Enable AutoTimer Extension. This allows the AutoTIME Arming NOTE 2, Code Enable & Disable and the Aux3, Aux4 actions to be delayed by entering a USER code during the Warning period.

TO ENABLE AUTO-DISARMING FOR EACH AREA NOTE 3

P354E 1E Area1 Disarm. Disarms Area1 at the time & day set by AutoTimer1.
P354E 2E Area2 Disarm. Disarms Area2 at the time & day set by AutoTimer1.
P354E 3E Home Disarm. Disarms Home Mode at the time & day set by AutoTimer1.
P354E 4E [not used]

TO CONTROL OUTPUTS BY AUTOTIMER NOTE 4 & NOTE 5

These AUX actions will take place at the time & day set by AutoTimer1.

P354E 5E AUX1 Toggle. Changes the current state of the AUX1 output. If ON then it will turn OFF and if OFF will turn ON.
P354E 6E AUX1 Pulse. Turns on the AUX1 output for a time period set P145E.
P354E 7E AUX2 Toggle. Changes the current state of the AUX2 output. If ON then it will turn OFF and if OFF will turn ON.
P354E 8E AUX2 Pulse. Turns on the AUX2 output for a time period set P146E.
Note. AUX outputs must be enabled for control by AutoTimers at options P121E-P124E.

* SMS programming shows the full SMS string to send. KPX+ and NAVIGATOR programming assumes the panel is already in program mode.

RADIO DEVICES OPERATION

ALARM: Any Ness radio device can operate on any zone. Hardwired zones continue to operate in parallel.

Radio Keys can also operate on radio zones for special purposes, but they should normally be used as Radio Codes.

Keyswitch input: A Radio Device programmed to Zone 8 will still work as an alarm even if the Zone 8 input operation has been changed to Keyswitch operation. The P60E 2E and 3E options only affect the Zone 8 terminal inputs.

VIBRATION: Radio device zone signals IGNORE the P30E–P38E vibration sensor settings.

TAMPER REPORT: Radio Device Tamper operation depends on the Armed State of the control panel.

RADIO TAMPER: causes the keypad to continuously beep and also to flash the RADIO, TAMPER and the ZONE (identifying the detector) lights. Pressing any key on the keypad or sending a TAMPER RESTORE will clear this warning.

LOW BATTERY REPORT: A low battery gives 10 beeps and flashes the RADIO & the BATTERY light. The ZONE light identifying the radio device is also ON. The flashing lights stop when any key on the keypad is pressed or a detector code with no low battery is received. Low Battery generates HISTORY and Communicator reports ONCE only (until the low battery is fixed and a restore report is received).

Supervision: If a zone has the P65E option ON and a radio code has been programmed for that zone, then the supervision is active. This means that the radio detector does not need to have its SUPER enabled (via header link) for the SUPERVISED timeout to occur. (Useful as an inactivity alarm). A zone supervision failure always flashes the identifying ZONE light and the RADIO light.

See pages 39 for more information about Zone Supervision.

NESS RADIO INTERFACE

The Ness Radio Interface (Part No. 100–200) is the optional serial radio receiver required to enable all radio functions. Connection to the control panel is via a 4 wire loom and plug supplied with the Ness Radio Interface.

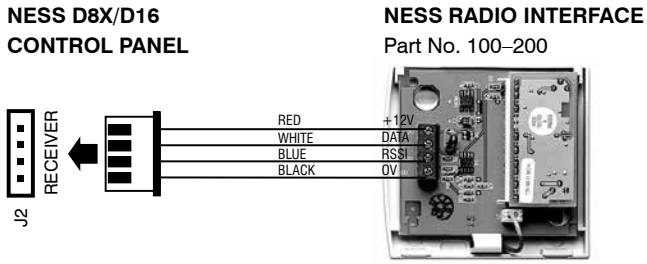

NOTES

- The Ness Radio Interface should be installed outside the control panel to prevent interference from the control panel's electronics. If the Radio Interface must be installed inside a metal enclosure, the antenna wire should protrude outside the enclosure.
- In cases where radio reception needs to be improved, the Radio Interface can be installed up to 50 metres away from the control panel. Use 14/0.20 SHIELDED cable or equivalent. The shield can either be connected to the EARTH connection or left unconnected. Leave the shield unconnected at the receiver end.
- For best performance, the antenna wire should be kept straight and not coiled, shortened or extended. An optional external antenna is available (100-046) for use in areas where the radio signal is marginal.

NOTES

- Signal strength of Radio Keys can be tested in USER PROGRAM Mode or INSTALLER PROGRAM Mode.
- Signal strength of all other Radio Devices is tested in INSTALLER PROGRAM Mode.
- PRESS **3E** to test the signal strength of the selected transmitter ONLY. (Other devices will be ignored).
- PRESS **4E** to test the signal strength of ANY Ness transmitter (including unprogrammed devices).

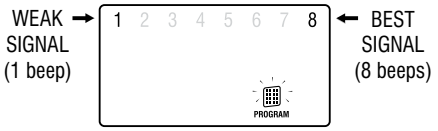

RADIO SIGNAL STRENGTH TEST

The Radio Signal Strength Test can be used to test the radio signal from any Ness radio device. The strength of the radio signal received is displayed on the zone lights 1 to 8 and beeped by the keypad.

The higher the number displayed (and beeped) the stronger the signal received.

TEST SEQUENCE:

1. Enter the program option for the radio device to be tested
   For Radio Keys: options P201E–P256E. For Radio Devices, options P101E–P116E.
2. Press 3E
3. Trigger the radio device
   - One of zone lights 1 to 8 will turn ON to indicate the signal strength from the transmitter.
   - The Signal Strength display remains on until another command is entered.
   - To clear the display and re-test the transmitter, simply press 3E again (or 4E to test any other transmitter).

P101E – P116E

PROGRAM MODE LEVEL
Installer

FACTORY DEFAULT
No Radio Devices programmed.

NOTES
- Radio Device programming is done by 'learning' the code by radio.
- Radio Devices can be prgrammed and deleted by keypad or SMS.
- Some Ness Radio Devices send separate Alarm and Restore signals.
- For special purposes, radio zones can be also programmed to accept radio keys. In this case the zone can not also be programmed to accept a radio device.
- Late model Ness Radio PIRs and Radio Reed Switches send Supervision signals.

SUPERVISION RELATED OPTIONS
P65E Supervised Radio Zones.
P66E Radio Supervision Alerts.
P67E Radio Supervision Time.
P75E 12E Radio Supervision Fail Report.

RADIO DEVICES - OPTION TABLE

D8 & D16	Zone 1	P101E
	Zone 2	P102E
	Zone 3	P103E
	Zone 4	P104E
	Zone 5	P105E
	Zone 6	P106E
	Zone 7	P107E
	Zone 8	P108E
D16	Zone 9	P109E
	Zone 10	P110E
	Zone 11	P111E
	Zone 12	P112E
	Zone 13	P113E
	Zone 14	P114E
	Zone 15	P115E
	Zone 16	P116E

TIP: To prevent conflicting radio signals when programming Radio Devices, disable each device once you have finished programming it. (Remove the battery).

Remember to enable all the devices when programming is completed.

106-168 LUX Radio PIR
106-170 LUX PET Radio PIR

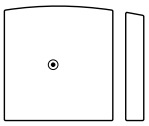

100–527
Universal Transmitter

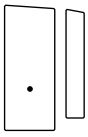

100–662
Mini Radio
Reed Switch

106–091
Micro Radio
Reed Switch

RADIO DEVICE PROGRAMMING

Each of the zones of the D8x or D16x can be a radio zone. Once programmed, zones can accept both radio devices and normal zone inputs simultaneously.

The optional 100–200 Ness Radio Interface is required for radio devices to operate.

A radio device is any type of Ness transmitter including Radio PIR, Radio Reed Switches, Radio Smoke Detector.

Up to 8 (D8) or 16 (D16) radio devices can be enrolled, one per zone.

PROGRAMMING RADIO DEVICES BY KEYPAD KPX+ NAVIGATOR

Applies to Radio PIRs, Radio Pendant, Radio Smoke Detector.

1. Select a zone using P101E – P116E (options P109E–P116E apply to D16 only).
   If the zone already has a Radio Device programmed the KPX ARMED light will be ON. Or on Navigator keypad 'Radio Programmed' will display. Press 0E (or Delete Device) to delete.
2. KPX+ Press 1E (The OK icon indicates 'Ready To Learn')
   NAVIGATOR Press Program Device
3. Send a Learn signal from the radio device by inserting the battery.
   A. If the Radio Device is accepted, the OK icon will turn off, the ARMED light will turn on and 3 beeps will sound. On the Navigator keypad 'Radio Programmed' will display.
   B. If an error beep sounds, the Radio Device is already assigned to another zone and must be cleared from that zone first.
   C. If SUPERVISED SIGNALS have also been successfully recognised, the TAMPER light will turn ON.

EXAMPLE: To program a Radio PIR on zone 1:

P101E 1E (or press Program Device) Insert the battery in the Radio PIR

PROGRAMMING SEQUENCE – WITH RESTORALS

For Radio Reed Switches and Radio Smoke Detectors.

Go to Step 1 above, then:

1A. KPX+ Press 2E (The MEM icon indicates this is a Restoring Radio Device.)
   NAVIGATOR Press Restoring Device

Go to Step 2 above, then:

3. Send a Learn signal from the radio device:
   Radio Reed Switch > Move the magnet towards the reed switch to send a signal.
   Radio Smoke Detector > Insert the battery to send the learn signal.

PROGRAMMING RADIO DEVICES BY SMS SMS

Radio devices can be programmed remotely by SMS but of course somebody must be on site to initiate the learn signal on the radio device being programmed.

Example, to program a radio PIR on zone 1.

NOTE BEFORE. Make sure that no other radio devices send a signal during this sequence to prevent progamming the wrong device.

The SMS string below enters program mode, selects zone 1, deletes any existing device, selects learn mode, then the panel will wait for 10 seconds for a learn signal. At this point you should insert the batteries in the radio PIR. Once the device is successfully programmed you will hear 3 beeps from the keypad. The panel will exit program mode on expiry of the 10 second learn window.

SMS	P[MasterCode]E P[InstallerCode]E P101E 0E P101E 1E

DELETING A RADIO DEVICE

1. Use P101E to P116E to select the zone
2. KPX+ Press 0E to clear the device (3 beeps will sound)
   NAVIGATOR Press Delete Device
2. SMS add 0E after the option number. eg, to delete the radio device on zone 1, send P[MasterCode]E P[InstallerCode]E P101E 0E

P201E – P256E

PROGRAM MODE LEVEL
Installer

FACTORY DEFAULT
No Radio Codes, all code are keypad codes.

NOTES
- User Code 1 (Master Code) is always a Keypad Code.
- Radio Codes can be deleted by keypad in the case of a lost Radio Key.
- Radio Keys are assigned to User Codes, so that Open/Close reports are identified by user number when the control panel is base station monitored. (If Open/Close reports are enabled)
- Enable a User Code as a Radio Code in Extra Options - turn on 5E.

RELATED OPTIONS
P101E–P116E Programming Radio Devices.

TO DELETE A RADIO CODE
Any Radio Code can be deleted as required.

Delete a radio code if a) the radio key has been lost or b) prior to programming a new radio key to replace another.

Radio Codes are automatically deleted when the user code type is changed to keypad code or reader code.

EXAMPLE: To delete Radio Code 56.
In Installer Program Mode: Press

KPX+ Press P256E 0E
NAVIGATOR Press P256E Delete Code

EXTRA OPTIONS MODE

To enable a User Code as a Radio Code go to EXTRA OPTIONS MODE and enable option 5E for that code. See steps 1 to 4 in Programming Sequence.

KPX+ Press EXCLUDE E to enter and exit Extra Options mode.

NAVIGATOR Press Extra Code Options to enter Extra Options mode. Press → to exit

RADIO CODES

Each of the 56 User Codes, except for the Master Code, can be programmed to be Radio Codes. This allows up to 55 Ness Radio Keys to be used for Arming and Disarming of the panel. The Ness RKP Radio Keypad can also be used with the D8/D16, (see the RKP installer manual). The optional 100–200 Ness Radio Interface is required for radio operation.

PROGRAMMING RADIO KEYS

Use the Extra Options programming mode to enable selected user codes as Radio Codes. When a user code is enabled as a Radio Code, its Keypad Code, (if any), is automatically deleted.

PROGRAMMING SEQUENCE:

1. In Installer Program Mode, enter the option number for the user code which will be become a radio code. (Example, enter P256E for user code 56).
2. KPX+ Press EXCLUDE E to enter Extra Options mode. (Exclude icon is on).
   NAVIGATOR Press Extra Code Options.
3. KPX+ Press 5E to enable that user code as a Radio Code. (Icon 5 is on).
   NAVIGATOR Press 5 - Radio Code.
4. KPX+ EXCLUDE E to exit Extra Options mode. (The Exclude icon is off).
   NAVIGATOR Press → to exit the Extra Options screen.
5. KPX+ Press 1E (The OK icon will turn ON to indicate ready to accept the Radio Key)
   NAVIGATOR Press Program Radio Code
   If a code is already programmed the OK icon will not turn on and a warning beep will sound. To clear the code, press 0E to clear existing codes then go back to step 5.
6. Press the OFF button on the Radio Key to be programmed
   If the Radio Key is accepted, the OK icon will turn off and 3 beeps will sound.
   If the OK icon stays on and a warning beep sounds, the Radio Key is already assigned to another User Code and must be cleared from that User Code first.

PROGRAMMING RADIO KEYS BY SMS SMS

Radio keys can be programmed remotely by SMS but of course somebody must be on site to initiate the learn signal on the radio key being programmed.

Example, to program a Ness RK4 Radio key as user 56.

The SMS string below enters program mode, selects user 56, enables the radio code, deletes any existing device, selects learn mode, then the panel will wait for 30 seconds for a learn signal. At this point you should press the OFF button on the radio key. Once the device is successfully programmed you will hear 3 beeps from the keypad. The panel will exit program mode on expiry of the 30 second learn window.

SMS	P[MasterCode]E P[InstallerCode]E P256E XE5EXE 0E 1E

When the keypad displays READY TO RECEIVE / OK, press the OFF button on the radio key.

USER CODE OPTIONS TABLE
See page 24 or 87 for the expanded table.

User Code	Option No.	Radio Code?
1 (Master)	P201E	Keypad Only
2	P202E	
3	P203E	
4	P204E	
5	P205E	
6	P206E	
7	P207E	
8	P208E	
9	P209E	
10	P210E	
11	P211E	
12	P212E	
13	P213E	
14	P214E	
15	P215E	
16	P216E	
17	P217E	
18	P218E	
19	P219E	
20	P220E	
21	P221E	
22	P222E	
23	P223E	
24	P224E	
25	P225E	
26	P226E	
27	P227E	
28	P228E	
29	P229E	
30	P230E	
31	P231E	
32	P232E	
33	P233E	
34	P234E	
35	P235E	
36	P236E	
37	P237E	
38	P238E	
39	P239E	
40	P240E	
41	P241E	
42	P242E	
43	P243E	
44	P244E	
45	P245E	
46	P246E	
47	P247E	
48	P248E	
49	P249E	
50	P250E	
51	P251E	
52	P252E	
53	P253E	
54	P254E	
55	P255E	
56	P256E	

Option No.		Description	Default
P199E	1E	Send Address	OFF
	2E	Send Time Stamp	OFF
	3E	Send Alarms	OFF
	4E	Send Warnings	OFF
	5E	Send Access Events	OFF
	6E	Zone Seal State	OFF
	7E	Send Test ASCII data	OFF
	8E	[not used]	OFF

P199E

SERIAL OUTPUT OPTIONS

PROGRAM MODE LEVEL
Installer

FACTORY DEFAULT
Options 1E-7E OFF - Serial data options disabled.

NOTES
The RS232 Serial data is output at 9600 baud, 8 data bits, no parity, 1 stop bit

Toggle the current setting for the ENABLING or DISABLING of USER Codes as set by the D8x and D16x V5.6 and later have the option for two way serial data communications via the onboard RS232 SERIAL port. Alarm and system messages can be sent and keypad/ status request data can be received. This allows high level interfacing with various external devices/controllers/dataloggers and other.

Messages are in ASCII format. Due to space constraints, the full protocol is not printed in this manual but is available on request.

KPX+	P199E xE to select one option as required
NAVIGATOR	P199E > select one option as required
SMS*	P[MasterCode]E P[InstallerCode]E P199E xE

1E ON: Send Address. The address is the last digit of Acc No.2 (P73E).

2E ON: Send Time Stamp.

3E ON: Send Alarms.

4E ON: Send Warnings.

5E ON: Send Access Events.

6E ON: Send Zone Seal State. (D8x/D16x V6 and later.)

7E ON: Send test ASCII string. Sends test data periodically, used for testing the serial port (D8x/D16x V6 and later.)

* SMS programming shows the full SMS string to send. KPX+ and NAVIGATOR programming assumes the panel is already in program mode.

P300E

PROGRAM MODE LEVEL
Installer

Option No.	Description
P300E	DEFAULT ALL ACCESS CONTROL OPTIONS

DEFAULT ALL ACCESS CONTROL OPTIONS

Enter P300E in Installer program mode to return all access control programs to factory default values.

RELATED OPTIONS

P301E 2E Allow arming with a double read
P301E 3E Allow arming with a single read and pushbutton.

P301E 4E Allow disarming, (single read).

Separate options for arming & disarming allows 'arm only' permission to be granted if required.

P121E 8E, P122E 8E, P123E 8E and P124E 8E to enable readers to operate AUX outputs.

P301E 1E Use Reader Addresses allows up to 3 Ness 101-014 Ultraprox Readers to be used with individual addresses.

P318E - P338E Assign readers to AUX outputs.

If connecting multiple readers, the option to enable multiple readers (P301E 1E) should be turned on *before* programming any access cards.

(Enabling P301E 1E erases existing card programming).

If P301E 3E is enabled, a momentary push button can be wired to zone 8 as shown.

For example, this option allows the reader output to operate a door lock during the day by presenting your card. Then at the end of the day press the push button within 5 seconds of presenting the card and the panel will arm.

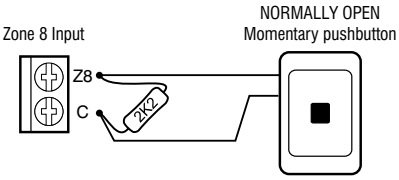

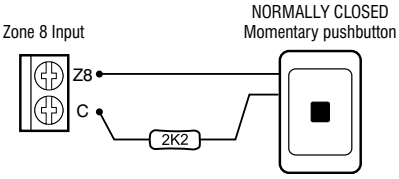

PROGRAMMING ACCESS CARDS

If the panel has 1, 2 or 3 Weigand proximity readers connected up to 55 of the panel's user codes can be programmed as Reader Codes. This allows arming/disarming by access card and operation of AUX outputs to open electric door strikes.

Use the Extra Options programming mode to enable selected user codes to Readers 1, 2 or 3. When a user code is enabled as a Reader Code, its Keypad Code, (if any), is automatically deleted. A user code enabled as a Reader Code cannot also be a Keypad Code or Radio Code.

PROGRAMMING SEQUENCE:

1. In Installer Program Mode, enter the option number for the user code to be programmed. (P202E–P256E).
2. KPX+ Press EXCLUDE E to enter Extra Options mode. (Exclude icon is on).
   NAVIGATOR Press Extra Code Options.
3. KPX+ and NAVIGATOR Press 6E, 7E or 8E to assign the user code to Reader 1, 2 or 3, or all three.
4. KPX+ EXCLUDE E to exit Extra Options mode. (The Exclude icon is off).
   NAVIGATOR Press → to exit the Extra Options screen.
5. KPX+ Press 1E (The OK icon will turn ON to indicate ready to accept the access card)
   NAVIGATOR Press Program Access Card
   If a code is already programmed the OK icon will not turn on and a warning beep will sound. To clear the code, press 0E to clear existing codes then go back to step 5.
6. Present a valid access card to the reader.
   If the card or fob is of a valid type, the reader's orange light will turn on.
   If the card is accepted, the keypad OK icon will turn off and 3 beeps will sound.
   If the OK icon stays on and a warning beep sounds, the access card is already assigned to another user code and must be cleared from that code first.

PROGRAMMING ACCESS CARDS BY SMS SMS

Access cards can be programmed remotely by SMS as long as a person is on site to present the card to the reader for programming.

Example, to program an access card as user 55.

The SMS string below enters program mode, selects user 55, assigns the code to readers 1,2 and 3, deletes any existing code, selects learn mode, then the panel will wait for 30 seconds for a card to be enrolled. At this point you should present the card to a reader. Once the card is successfully programmed you will hear 3 beeps from the keypad. The panel will exit program mode on expiry of the 30 second learn window.

SMS*	P[MasterCode]E P[InstallerCode]E P255E XE6E7E8EXE 0E 1E

When the keypad displays READY TO RECEIVE / OK, present the card to a reader.

* SMS programming shows the full SMS string to send. KPX+ and NAVIGATOR programming assumes the panel is already in program mode.

Option No.		Description	Default
P301E	1E	Use reader addresses	OFF
	2E	Arm with double read	ON
	3E	Arm with single read and pushbutton	OFF
	4E	Disarm with access card	ON
	5E	REX Input 1 (Zone 5 input)	OFF
	6E	REX Input 2 (Zone 6 input)	OFF
	7E	REX Input 3 (Zone 7 input)	OFF
	8E	Strobe Flash on Arm/Disarm by Reader	ON

P301E — ACCESS CONTROL OPTIONS 1E - 8E

PROGRAM MODE LEVEL
Installer mode

Enable or disable P301E 1E to 8E as required. Only one option can be on.

KPX+	P301E 1E - 8E to enable/disable the option as required
NAVIGATOR	P301E > enable/disable 1E - 8E as required
SMS*	P[MasterCode]E P[InstallerCode]E P301E [1E -8E] as required

P301E 1E — USE READER ADDRESSES

FACTORY DEFAULT
OFF (Use one reader).

NOTES
When using multiple readers, this option must be enabled before programming any access cards, (to avoid losing card programming when the option is enabled).

If ON then all readers connected to the D8x/D16x must have set addresses of 1, 2 or 3. The data is then sent in an extended format that includes the reader address. (Use up to three Ness prox readers). The reader's address is determined the connection of the violet wire. See the wiring diagram on page 86).

If this option is off, one standard Weigand 26bit reader can be used.

P301E 2E — ARM WITH DOUBLE READ

FACTORY DEFAULT
ON

When this option is enabled the panel will arm if the same valid access card is presented to a reader twice within 5 seconds.

P301E 3E — ARM WITH SINGLE READ AND PUSHBUTTON

FACTORY DEFAULT
OFF

NOTES
- Connect a pushbutton to Zone 8.
- This option automatically disables zone 8 as an alarm zone

When this option is enabled the panel will arm if a valid access card is presented to a reader once and zone 8 is unsealed momentarily within 5 seconds.

This option can be used to prevent accidental arming or disarming by access card.

P301E 4E — DISARM WITH ACCESS CARD

FACTORY DEFAULT
ON

When this option is enabled a valid access card will disarm the panel.

P301E 5E–7E — REQUEST TO EXIT (REX) INPUTS

FACTORY DEFAULT
OFF

NOTES
- When one of these options is enabled, that zone is automatically disabled as an alarm zone.
- The zone must reseal before another Request To Exit can occur. i.e, If the zone is left unsealed, the door will not be left unlocked.

RELATED OPTIONS
P37E, P38E Long Response Zones
P318E, P328E, P338E, P121E–P124E Programming of Readers to Aux outputs.

These options convert zones 5, 6 and 7 into Request To Exit (REX) inputs for access control, allowing for push button door exit. Connect a N/C or N/O pushbutton to either open circuit or short circuit the zone resistor.

The REX zones can also be programmed as Long Response Zones (P37E, P38E) to prevent accidental door opening, the REX button must be pressed and held for 1sec or 3sec, as programmed.

P301E 5E enables Zone 5 to trigger the AUX outputs assigned to Reader1.

P301E 6E enables Zone 6 to trigger the AUX outputs assigned to Reader2.

P301E 7E enables Zone 7 to trigger the AUX outputs assigned to Reader3.

P301E 8E — STROBE FLASH ON ARM/DISARM BY READER

Factory Default
ON

This option enables strobe flash when arming and disarming by Reader.

* SMS programming shows the full SMS string to send. KPX+ and NAVIGATOR programming assumes the panel is already in program mode.

Option No.	Description	ZONES 1–8 (D8 & D16) 1	2	3	4	5	6	7	8	ZONES 9–16 (D16) 9	10	11	12	13	14	15	16
P303E	DOTL ZONES																

P303E — DOOR OPEN TOO LONG (DOTL) ZONES

PROGRAM MODE LEVEL
Installer

FACTORY DEFAULT
All OFF: No DOTL zones.

NOTES
Zones can be assigned as DOTL zones in addition to normal alarm functions. Therefore, DOTL zones can operate as alarm zones when armed and DOTL zones when disarmed. (Day Zone programming still applies).

RELATED OPTIONS
P121E 7E DOTL Alarms to AUX1
P122E 7E DOTL Alarms to AUX1
P305E Misc DOTL options
P304E DOTL Time

KPX+ PRO TIP
When selecting zones, MEMORY E selects all, 0 E deselects all.

This selects the zones that will generate a DOTL alert if the zone is unsealed for longer than the time set by P304E.

KPX+	P303E [Zone Number] E to enable/disable zones
NAVIGATOR	P303E > Select zones
SMS*	P[MasterCode]E P[InstallerCode]E P303E [Zone Number] E

Option No.	Description	Default	Note
P304E	DOTL TIMER	20	01–99 seconds

P304E — DOTL TIMER

PROGRAM MODE LEVEL
Installer

FACTORY DEFAULT
20 seconds

RELATED OPTIONS
P303E DOTL Zones
P121E 7E DOTL Alarms to AUX1
P122E 7E DOTL Alarms to AUX1
P305E Misc DOTL options

Sets the delay time in seconds before a DOTL zone generates a DOTL alert. Enter a value between 01 and 99.

KPX+	P304E [New Value] E
NAVIGATOR	P304E > [New Value] E
SMS*	P[MasterCode]E P[InstallerCode]E P304E [NewValue] E

* SMS programming shows the full SMS string to send. KPX+ and NAVIGATOR programming assumes the panel is already in program mode.

Option No.		Description	Default
P305E	1E	DOTL output LATCHES	OFF
	2E	DOTL outputs to Output Expander	OFF
	3E	DOTL Timer in Minutes	OFF
	4E	DOTL Timer in Hours	OFF
	5E	DOTL zone flashes on keypad	OFF
	6E	[not used]	OFF
	7E	[not used]	OFF
	8E	[not used]	OFF

P305E — ACCESS CONTROL OPTIONS 1E - 5E

PROGRAM MODE LEVEL
Installer mode

FACTORY DEFAULT
All OFF

Enable or disable P305E 1E to 5E as required.

KPX+	P305E 1E - 5E to enable/disable the option as required
NAVIGATOR	P305E > enable/disable 1E - 5E as required
SMS*	P[MasterCode]E P[InstallerCode]E P305E [1E -5E] as required

P305E 1E — DOTL OUTPUT LATCHES

RELATED OPTIONS
P121E 7E DOTL Alerts to Aux1.
P122E 7E DOTL Alerts to Aux2.

With this option on, DOTL alerts will either follow the sealed/unsealed state of DOTL zones or latch the Aux output/s which have been programmed for DOTL alerts.

P305E 2E — DOTL ALERTS TO OUTPUT EXPANDER

RELATED OPTIONS
P117E 1E Enable Output Expander

With this option on, DOTL alerts will be sent to the optional Output Expander on the same output number as the DOTL zone number. P305E 1E settings apply.

P305E 3E — DOTL TIMER IN MINUTES

RELATED OPTIONS
P304E DOTL Timer

With this option ON, the P304E timer counts in minutes rather than seconds to give the option for longer DOTL times.

P305E 4E — DOTL TIMER IN HOURS

RELATED OPTIONS
P304E DOTL Timer

With this option ON, the P304E timer counts in hours rather than seconds to give the option for extra long DOTL times.

P305E 5E — DOTL ALERTS TO KEYPAD

With this option on, DOTL alerts will SLOWLY flash the corresponding zone light on the keypad. P305E 1E settings apply.

Option No.	Description	Default	Note
P319E	ULTRAPROX READER 1 OUTPUT TIME	5	01–24 seconds
P329E	ULTRAPROX READER 2 OUTPUT TIME	5	01–24 seconds
P339E	ULTRAPROX READER 3 OUTPUT TIME	5	01–24 seconds

P319E, P329E, P339E — READERS 1–3 OUTPUT TIME

PROGRAM MODE LEVEL
Installer

FACTORY DEFAULT
5 seconds

RELATED OPTIONS
P318E, P328E, P338E

Sets the time that the outputs selected by P318E, P328E and P338E are ON. Range 1-24 seconds.

KPX+	P304E [New Value] E
NAVIGATOR	P304E > [New Value] E
SMS*	P[MasterCode]E P[InstallerCode]E P304E [NewValue] E

* SMS programming shows the full SMS string to send. KPX+ and NAVIGATOR programming assumes the panel is already in program mode.

Option No.		Description	Default
P318E	1E	Ultraprox Reader1 to AUX1	OFF
	2E	Ultraprox Reader1 to AUX2	OFF
	3E	Ultraprox Reader1 to AUX3	OFF
	4E	Ultraprox Reader1 to AUX4	OFF
	5E	Ultraprox Reader1 to AUX5	OFF
	6E	Ultraprox Reader1 to AUX6	OFF
	7E	Ultraprox Reader1 to AUX7	OFF
	8E	Ultraprox Reader1 to AUX8	OFF
P328E	1E	Ultraprox Reader2 to AUX1	OFF
	2E	Ultraprox Reader2 to AUX2	OFF
	3E	Ultraprox Reader2 to AUX3	OFF
	4E	Ultraprox Reader2 to AUX4	OFF
	5E	Ultraprox Reader2 to AUX5	OFF
	6E	Ultraprox Reader2 to AUX6	OFF
	7E	Ultraprox Reader2 to AUX7	OFF
	8E	Ultraprox Reader2 to AUX8	OFF
P338E	1E	Ultraprox Reader3 to AUX1	OFF
	2E	Ultraprox Reader3 to AUX2	OFF
	3E	Ultraprox Reader3 to AUX3	OFF
	4E	Ultraprox Reader3 to AUX4	OFF
	5E	Ultraprox Reader3 to AUX5	OFF
	6E	Ultraprox Reader3 to AUX6	OFF
	7E	Ultraprox Reader3 to AUX7	OFF
	8E	Ultraprox Reader3 to AUX8	OFF

P318E, P328E, P338E

READERS 1–3 TO AUX OUTPUTS 1–8

PROGRAM MODE LEVEL
Installer mode

FACTORY DEFAULT
All OFF

Enable or disable P318E, P328E, P338E, 1E to 8E as required.

These options give the flexiblity of assigning any access reader to any Aux output for operating door strikes, magnetic locks, etc. Readers can be assigned to multiple outputs. Always use an external relay board (101-283) on each Aux output on the output expander/s if connecting devices which draw more than 100mA.

KPX+	PxxxE 1E - 8E to enable/disable the option as required
NAVIGATOR	PxxxE > enable/disable 1E - 8E as required
SMS*	P[MasterCode]E P[InstallerCode]E PxxxE [1E -8E] as required

P318E 1E–8E

READER 1 TO AUX OUTPUTS

RELATED OPTIONS
P121E 8E, P122E 8E, P123E 8E, P124E 8E, P151E 7E, P152E 7E, P153E 7E, P154E 7E, P319E, P329E, P339E

Enable options 1-8 as required to assign Reader 1 to Aux outputs as per the table above.

P328E 1E–8E

READER 2 TO AUX OUTPUTS

RELATED OPTIONS
P121E 8E, P122E 8E, P123E 8E, P124E 8E, P151E 7E, P152E 7E, P153E 7E, P154E 7E, P319E, P329E, P339E

Enable options 1-8 as required to assign Reader 2 to Aux outputs as per the table above.

P338E 1E–8E

READER 3 TO AUX OUTPUTS

RELATED OPTIONS
P121E 8E, P122E 8E, P123E 8E, P124E 8E, P151E 7E, P152E 7E, P153E 7E, P154E 7E, P319E, P329E, P339E

Enable options 1-8 as required to assign Reader 3 to Aux outputs as per the table above.

* SMS programming shows the full SMS string to send. KPX+ and NAVIGATOR programming assumes the panel is already in program mode.

WIRING A SINGLE READER

P301E 1E is OFF (Reader addresses not used)

Connect only 1 reader.

In this mode the panel is compatible with the Ness 101-014 Ness Ultraprox Weigand Reader.

Recommended cable is twisted 3 pair shielded cable with only one end of the shield connected to ground.
For cable runs exceeding 75m use the Ness Weigand data repeater.

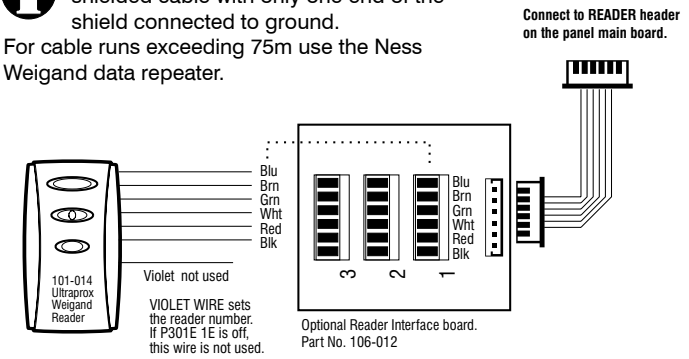

WIRING A DOOR STRIKE

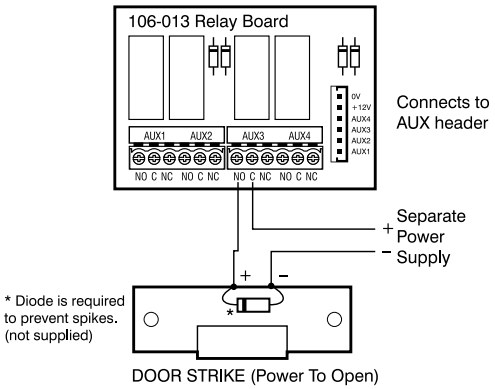

WIRING MULTIPLE READERS

P301E 1E is ON (Use Reader addresses)

When multiple readers are used, the panel needs to identify the individual readers.

The 101-014 Ness Ultraprox Weigand Readers can be addressed as Reader 1, 2 or 3 by connecting the Violet wire to an appropriate terminal.

You can setup 3 x 101-014 readers with individual addresses or setup one or more readers with the same address.

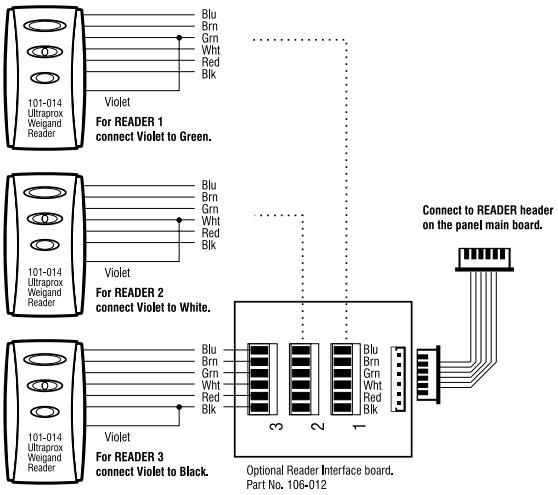

REQUEST TO EXIT (REX) USING A KEYPAD CODE

Codes selected for Code Only Arming can be used as REX codes for access control functions. That is, the code can operate an output instead of arming/disarming the panel.

There are two conditions needed to make the code operate as a REX code - It is assigned to CODE ONLY ARM and it is not assigned to either Area 1 or Area 2.

The first digit of the user code determines which AUX output is operated by the REX code. That is, a REX code in the format 1xxx operates AUX1, 2xxx operates AUX2 and 3xxx operates AUX3.

Notes:

1. Reader 1 can also use codes starting with 4-9 if only one exit point is used.
2. Set P318E, P328E, P338E options to select appropriate AUX outputs.
3. Set corresponding P121E, P122E, P123E, P124E options to 8E.

Setup Example:

- User Codes 1555, 2555, 3555 are programmed to be Code Only Arm and are not assigned to Area 1 or Area 2.
- P318E 1E, P328 2E, P338 3E are programmed to set reader output to selected Aux output.
- P121E 8E, P122E 8E, P123E 8E are programmed to set AUX outputs to reader.

Operation Example:

- Code 1555 activates door associated with AUX1 (READER 1).
- Code 2555 activates door associated with AUX2 (READER 2).
- Code 3555 activates door associated with AUX3 (READER 3).

USER CODE OPTIONS TABLE

KPX+ EXCLUDE+E toggles Extra Options mode. NAVIGATOR Press Extra Code Options.
(Installer Program mode only)

USER CODE u	OPTION NO.	KEYPAD PIN	1E AREA 1 Code	2E AREA 2 Code	3E ARM ONLY	4E "CODE ONLY" ARM (REX CODE)	5E RADIO Code	6E Reader 1 Code	7E Reader 2 Code	8E Reader 3 Code	9E Enable for **AutoTime**
			PAGE 24				Page 79	Page 81			Page 74-76
1 (Master)	P201E	123	ON	ON							
2	P202E		ON								
3	P203E		ON								
4	P204E		ON								
5	P205E		ON								
6	P206E		ON								
7	P207E		ON								
8	P208E		ON								
9	P209E		ON								
10	P210E		ON								
11	P211E		ON								
12	P212E		ON								
13	P213E		ON								
14	P214E		ON								
15	P215E		ON								
16	P216E		ON								
17	P217E		ON								
18	P218E		ON								
19	P219E		ON								
20	P220E		ON								
21	P221E		ON								
22	P222E		ON								
23	P223E		ON								
24	P224E		ON								
25	P225E		ON								
26	P226E		ON								
27	P227E		ON								
28	P228E		ON								
29	P229E		ON								
30	P230E		ON								
31	P231E		ON								
32	P232E		ON								
33	P233E		ON								
34	P234E		ON								
35	P235E		ON								
36	P236E		ON								
37	P237E		ON								
38	P238E		ON								
39	P239E		ON								
40	P240E		ON								
41	P241E		ON								
42	P242E		ON								
43	P243E		ON								
44	P244E		ON								
45	P245E		ON								
46	P246E		ON								
47	P247E		ON								
48	P248E		ON								
49	P249E		ON								
50	P250E		ON								
51	P251E		ON								
52	P252E		ON								
53	P253E		ON								
54	P254E		ON								
55	P255E		ON								
56	P256E		ON								

OPTION		DESCRIPTION	DEFAULT	PAGE
P26E u		ENTRY DELAY Time 1	20 sec	25
P27E u		Entry Delay Time 2	6=60 sec	
P28E u		EXIT DELAY Time	60 sec	
P29E		SIREN RESET Time	5 min	
P30E		Normal Zone Sensitivity	all zones	26
P31E-36E		Vibration Sensitivity, High-Low	none	
P37E		Long Response Zones - 1 second	none	
P38E		Long Response Zones - 3 seconds	none	
P39E		Double Trigger zones	none	27
P40E		Instant zones	zones 3+	
P41E		ENTRY DELAY 1 zones	Zone 1	
P42E		HANDOVER zones	Zone 2	28
P43E		Entry Delay 2 zones	none	
P44E		Lockout zones (RESET output)	All zones	
P45E		AREA 1 zones	All zones	
P46E		AREA 2 zones	none	
P51E		HOME MODE zones	none	30
* See page 29 for information on Area operation, Home mode & Temporary Day Zones				
P52E		24hr zones	none	30
P53E		Day Mode zones	none	
P54E		RESET output zones	All zones	31
P55E		STROBE zones	All zones	
P56E		Keypad Sonalert zones	All zones	
P57E		SIREN zones	All zones	32
P58E		Aux1 / Aux3 zones	none	
P59E		Aux2 / Aux4 zones	none	
P60E	1E	Entry Beeps	ON	33-34
	2E	Keyswitch Home/Disarm	OFF	
	3E	Keyswitch Arm/Disarm	OFF	
	4E	Tamper Siren lockout	ON	
	5E	Duress to RESET output	OFF	
	6E	Auto Exclude zones	ON	
	7E	Auto keypad display off	OFF	
	8E	Delayed Aux3, Aux4 outputs	OFF	
P61E	1E	Tamper to RESET output	ON	35
	2E	Tamper to STROBE output	ON	
	3E	Tamper to Keypad Sonalert	ON	
	4E	Tamper to SIREN output	ON	
	5E	Keypad Panic to RESET output	ON	
	6E	Keypad Panic to STROBE output	ON	
	7E	Keypad Panic to Sonalert	ON	
	8E	Keypad Panic to SIREN output	ON	

u Options marked "u" can be programmed in User Program Mode

All options can be programmed in Installer Program Mode

SMS Options relating to SMS reporting are marked

OPTION		DESCRIPTION	DEFAULT	PAGE
P62E	1E	Shortcut Memory display	ON	36
	2E	Shortcut Zone Exclude	ON	
	3E	Shortcut Home Mode	ON	
	4E	Shortcut Keypad Panic	OFF	
	5E	Shortcut Area1 Arming	ON	
	6E	Shortcut Area2 Arming	OFF	
	7E	Brief warning on Auto Exclude	ON	
	8E	Exit Time x10	OFF	
P63E	1E	Home Mode alarms to RESET output	ON	37
	2E	Home Mode alarms to STROBE	ON	
	3E	Home Mode alarms to SONALERT	ON	
	4E	Home Mode alarms to SIREN	OFF	
	5E	Day Mode to RESET output	OFF	
	6E	Day Mode to STROBE	OFF	
	7E	Day Mode KP SONALERT (Chime KPX)	ON	
	8E	Day Mode to SIREN	OFF	
P64E	1E	Brief Home Mode Alarm	OFF	37-38
	2E	Brief Day Alarm	OFF	
	3E	Home zones Entry Delay2	ON	
	4E	Radio Key SIREN CHIRPS	OFF	
	5E	[not used]	OFF	
	6E	Strobe Flash on Home arm by radio	OFF	
	7E	[not used]	OFF	
	8E	[not used]	OFF	
P65E		Supervised zones	NONE	39
P66E	1E	Zone Supervision alarm to RESET o/p	OFF	40-41
	2E	Zone Supervision alarm to STROBE	OFF	
	3E	Zone Supervision alarm to SONALERT	OFF	
	4E	Zone Supervision alarm to SIREN	OFF	
	5E	Enable WIRED ZONE supervision	OFF	
	6E	[not used]	OFF	
	7E	Zone Supervision speedup x 6	OFF	
	8E	Zone Supervision speedup x10	OFF	
P67E		Zone Supervision Time	24 (hours)	41
P68E	1E	Double Press Radio Panic	OFF	42-43
	2E	Auto Re-Arm	OFF	
	3E	Long Radio Message	ON	
	4E	"OK/READY" Display	OFF	
	5E	Radio Arming “unsealed” warning	OFF	
	6E	24hr Zone Fire Siren sound	OFF	
	7E	Single Shot strobe on Arm by R/Key	OFF	
	8E	Quiet chirps on radio Arm/Disarm	OFF	
P69E	1E	Flash strobe on medical alarm	OFF	44-45
	2E	[not used]	OFF	
	3E	Quiet Home Mode Siren	OFF	
	4E	6 beeps on Arming	OFF	
	5E	Home arm by radio key ON/OFF	OFF	
	6E	Disable Mains Fail Alarm	OFF	
	7E	Exit BEEPS - Full Arm	OFF	
	8E	Exit BEEPS - Home Mode	OFF	

OPTION		DESCRIPTION	DEFAULT	PAGE
P70E		Telephone No.1 for CID reporting **See P170E**	NONE	46
P71E		Telephone No.2 for CID reporting **See P171E**	NONE	
P72E		Account No. 1 for Central Station rpt	0000	46
P73E		Account No. 2 for Central Station rpt	0000	
The following options relate to reporting to a central station. See P190E, P191E, P192E, P193E for related SMS reporting options.				
P74E		REPORT ZONE ALARMS	All zones	49
P75E	1E	Report DURESS alarms	OFF	50
D8 & D16	2E	Report MEDICAL alarms	OFF	
	3E	Report keypad & Keyswitch PANIC	ON	
	4E	Report FIRE alarms	OFF	
	5E	Report PANEL TAMPER alarms	ON	
	6E	Report EXTERNAL TAMPER alarms	ON	
	7E	Report KEYPAD TAMPER alarms	ON	
	8E	Report EXIT FROM INSTALLER mode	OFF	
D8, P92E **1E** **D16**, P75E **9E**		Report RADIO TAMPER	ON	
D8, P92E **2E** **D16**, P75E **10E**		Report RADIO PANIC by User ID	ON	
D8, P92E **3E** **D16**, P75E **11E**		Report RADIO Low Battery by device	OFF	
D8, P92E **4E** **D16**, P75E **12E**		Report ZONE SUPERVISION FAIL	OFF	
D8, P92E **5E** **D16**, P75E **13E**		Report PANEL LOW BATTERY	ON	
D8, P92E **6E** **D16**, P75E **14E**		Report MAINS FAIL	ON	
P76E		Report Zone Restorals	All on	49
P77E		Report Misc. Restorals	All on	50
P78E		Report Multiple Zone alarms	NONE	49
P79E		Account No.2 zones	NONE	49
P80E		Tel No. 3 for Test Calls **See P172E**	NONE	
P82E	1E	Send RESTORAL report immediately	OFF	50
	2E	Send RESTORAL after siren time	OFF	
	3E	Send RESTORAL after Disarm & seal	OFF	
	4E	Send RESTORAL after Disarm always	ON	
P83E		TEST CALL Interval	84 (168hrs)	51
P84E		Time before NEXT TEST CALL		
P85E		Polling Interval	8=OFF	
P86E	1E	Disable Communicator	OFF	52
	2E	Enable reporting by CID	ON	
	3E	Enable reporting by ARMOR IP	OFF	
P87E*	1E	Split dial Primary/Secondary numbers	OFF	53
	2E	[not used]	OFF	
SMS	3E	Enable reporting by SMS	ON	
	4E	4 Dialling attempts	ON	

OPTION		DESCRIPTION	DEFAULT	PAGE
P88E	1E	Send AREA 1 Open/Close to Central Stn	OFF	54-55
	2E	Send AREA 2 Open/Close to Central Stn	OFF	
		See P194E for Open/Close by SMS		
	3E	Siren Chirp on Kiss-off	OFF	
	4E	Flash Strobe on Kiss-off	OFF	
	5E	Forced Opening report	ON	
	6E	Delayed Closing Reports	OFF	
	7E	Manual Exclude Reports	ON	
	8E	Auto Exclude Reports	ON	
P89E	1E	ENABLE TEST CALLS	ON	56
	2E	Mains Report Delay (1 hour)	ON	
	3E	[not used]	OFF	
	4E	Swinger shutdown	ON	
	5E	Line Fault Monitor	OFF	
	6E	Master Code Clears Reprt Attempts	OFF	
The following options relate to reporting to central station. See P191E, P193E for related SMS reporting options.				
P92E		Report Misc. Alarms 9-14 (D8 only)	1,2,5,6 on	50
P93E		Report Misc. Restorals 9-14 (D8 only)	All on	
P94E		"No Memory Warning" zones	none	57
P95E		CLEAR RADIO DEVICES		58
P96E		CLEAR MEMORY		
P97E		CLEAR PANEL OPTIONS (restore Factory Defaults)		
P98E		CLEAR User codes, Radio Keys, Access Cards		
P99E		Program the INSTALLER CODE	000000	58
P101E-P116E		PROGRAM RADIO DEVICES 1–8 or 1–16	none	78
P117E	1E	Enable Output Expander	OFF	59-60
	2E	Expander Output Format A, B	OFF	
	3E	Day Zone Follower	OFF	
	4E	Output Exclude	OFF	
	5E	Expander Output Format C	OFF	
	6E	User Code Toggle or Pulse	OFF	
P118E		Output Expander zones	none	
P119E		Output Expander alarm zones	none	
P120E	1E	Latched keyswitch input	OFF	61-62
	2E	Home arm chirps by radio key	OFF	
	3E	Radio Key AUX arms Home mode	OFF	
	4E	Keyswitch DISARM ONLY	OFF	
	5E	Keyswitch ARM ONLY	OFF	
	6E	Smart Beeps (Brief Home & Day modes)	OFF	
	7E	Entry Delay Extender	OFF	
	8E	Area2 Disarm by Keyswitch Allowed	OFF	
P121E	1E	Zone alarms to AUX1 (P58E selects zones)	ON	63
	2E	Zone Supervision alarms to AUX1	OFF	
	3E	Radio key Panic TOGGLE	OFF	
	4E	Radio key Panic PULSE	OFF	
	7E	Door Open Too Long (DOTL) alarm to AUX1	OFF	
	8E	Reader [x] output to AUX1	OFF	

OPTION		DESCRIPTION	DEFAULT	PAGE
P122E	1E	Zone alarms to AUX2 (P59E selects zones)	ON	65
	2E	Zone Supervision alarms to AUX2	OFF	
	3E	Radio key Aux Button TOGGLE	OFF	
	4E	Radio key Aux Button PULSE	OFF	
	5E	[not used]	OFF	
	6E	[not used]	OFF	
	7E	Door Open Too Long (DOTL) alarm to AUX2	OFF	
	8E	Reader [x] output to AUX2	OFF	
P123E	1E	Zone Alarms to AUX3	OFF	67
	3E	Enable AUX3 for AutoTime	OFF	
	4E	Radio Key Panic Pulses AUX3	OFF	
	5E	[not used]	OFF	
	6E	[not used]	OFF	
	7E	[not used]	OFF	
	8E	Reader [x] output to AUX3	OFF	
P124E	1E	Zone Alarms to AUX4	OFF	69
	2E	Enable Extension Sonalert	OFF	
	3E	Enable AUX4 for AutoTime	OFF	
	4E	Radio Key AUX Pulses AUX4	OFF	
	5E	Enable AUX4 as Fail To Communicate o/p	OFF	
	6E	[not used]	OFF	
	7E	[not used]	OFF	
	8E	Reader [x] output to AUX4	OFF	
P125E		Enable hardwired zones	All on	72
P126E	1E	Enable Double key PANIC	ON	73
	2E	Enable Double key FIRE	OFF	
	3E	Enable Dbl key MEDICAL & Nav MEDICAL	OFF	
	4E	Enable Entry Chime, DAY Mode	OFF	
	5E	Enable Entry Chime, HOME Mode	OFF	
	6E	[not used]	OFF	
	7E	[not used]	OFF	
	8E	Disable One Digit At A Time display	ON	
P129E	1E	0k EOL resistors	OFF	73
	2E	1k EOL resistors	OFF	
	3E	1.5k EOL resistors	OFF	
	4E	2.2k EOL resistors	ON	
	5E	3.3k EOL resistors	OFF	
	6E	3.9k EOL resistors	OFF	
	7E	4.7k EOL resistors	OFF	
	8E	5.6k EOL resistors	OFF	
	9E	6.8k EOL resistors	OFF	
	10E	8.2k EOL resistors	OFF	
	11E	10k EOL resistors	OFF	
	12E	12k EOL resistors	OFF	
	13E	22k EOL resistors	OFF	
P141E	1E	Area 1 Armed to AUX1	OFF	64
	2E	Area 2 Armed to AUX1	OFF	
	3E	Home Armed to AUX1	OFF	
	4E	Keypad toggle AUX1	OFF	
	5E	[not used]	OFF	
	6E	[not used]	OFF	
	7E	[not used]	OFF	
	8E	Pulse AUX1	OFF	

OPTION		DESCRIPTION	DEFAULT	PAGE
P142E	1E	Area 1 Armed to AUX2	OFF	66
	2E	Area 2 Armed to AUX2	OFF	
	3E	Home Armed to AUX2	OFF	
	4E	Keypad toggle AUX2	OFF	
	5E	[not used]	OFF	
	6E	[not used]	OFF	
	7E	[not used]	OFF	
	8E	Pulse AUX2	OFF	
P143E	1E	Area 1 Armed to AUX3	OFF	68
	2E	Area 2 Armed to AUX3	OFF	
	3E	Home Armed to AUX3	OFF	
	4E	Keypad toggle AUX3	OFF	
	5E	[not used]	OFF	
	6E	[not used]	OFF	
	7E	[not used]	OFF	
	8E	Pulse AUX3	OFF	
P144E	1E	Area 1 Armed to AUX4	OFF	70
	2E	Area 2 Armed to AUX4	OFF	
	3E	Home Armed to AUX4	OFF	
	4E	Keypad toggle AUX4	OFF	
	5E	[not used]	OFF	
	6E	[not used]	OFF	
	7E	[not used]	OFF	
	8E	Pulse AUX4	OFF	
P145E		AUX1 Timer (1-99 sec)	20 sec	64
P146E		AUX2 Timer (1-99 sec)	20 sec	66
P147E		AUX3 Timer (1-99 sec)	20 sec	68
P148E		AUX4 Timer (1-99 sec)	20 sec	70
P151E	4E	Keypad toggle AUX5	OFF	71
	5E	[not used]	OFF	
	7E	Reader Output to AUX5	OFF	
	8E	PULSE AUX5	OFF	
P152E	4E	Keypad toggle AUX6	OFF	71
	5E	[not used]	OFF	
	7E	Reader Output to AUX6	OFF	
	8E	PULSE AUX6	OFF	
P153E	4E	Keypad toggle AUX7	OFF	71
	5E	[not used]	OFF	
	7E	Reader Output to AUX7	OFF	
	8E	PULSE AUX7	OFF	
P154E	4E	Keypad toggle AUX8	OFF	71
	5E	[not used]	OFF	
	7E	Reader Output to AUX8	OFF	
	8E	PULSE AUX8	OFF	
P155E		AUX5 timer	20 sec	71
P156E		AUX6 timer	20 sec	
P157E		AUX7 timer	20 sec	
P158E		AUX8 timer	20 sec	

OPTION		DESCRIPTION	DEFAULT	PAGE
P160E		Alarm Siren Volume	99	72
P161E		Fire Siren Volume	99	
P162E		Chirp Siren Volume	16	
		Central Station Reporting Number1	none	47
P171E		Central Station Reporting Number2	none	
P172E		Central Station Test Call Number	none	
SMS Phone numbers are user or installer programmable				
P180E SMS		u Ph No 1 for SMS alarm reports	none	48
P181E SMS		u Ph No 2 for SMS alarm reports	none	
P182E SMS		u Ph No 3 for SMS alarm reports	none	
P183E SMS		u Ph No 4 for SMS Area1 O/C reports	none	
P184E SMS		u Ph No 5 for SMS Area2 O/C reports	none	
P185E SMS		u Ph No 6 for SMS operation	none	
P186E SMS		u Ph No 7 for SMS operation	none	
P187E SMS		u Ph No 8 for SMS operation	none	
P188E SMS		u Ph No 9 for SMS operation	none	
P189E SMS		u Ph No 10 for SMS operation	none	
P190E SMS		Report Zone Alarms by SMS	All on	49
P191E SMS		Report Misc Alarms by SMS	See page	50
P192E SMS		Report Zone Restorals by SMS	All on	49
P193E SMS		Report Misc Restorals by SMS	All on	50
P194E SMS	1E	Send AREA 1 Open/Close by SMS	OFF	54
	2E	Send AREA 2 Open/Close by SMS	OFF	
P199E		Serial Output Options 1E-7E	All off	80

ACCESS CONTROL OPTIONS

P300E		DEFAULT ALL ACCESS CONTROL OPTIONS		81
P301E	1E	Use reader addresses	OFF	82
	2E	Arm with double read	ON	
	3E	Arm with single read and pushbutton	OFF	
	4E	Disarm with access card	ON	
	5E	REX Input 1 (Zone 5 input)	OFF	
	6E	REX Input 2 (Zone 6 input)	OFF	
	7E	REX Input 3 (Zone 7 input)	OFF	
	8E	Strobe Flash on Arm/Disarm by Reader	ON	
P303E		DOTL zones	none	83-84
P304E		DOTL time	20 sec	
P305E	1E	DOTL output LATCHES	OFF	
	2E	DOTL outputs to Output Expander	OFF	
	3E	DOTL Timer in Minutes	OFF	
	4E	DOTL Timer in Hours	OFF	
	5E	DOTL zone flashes on keypad	OFF	

OPTION		DESCRIPTION	DEFAULT	PAGE
AUX OUTPUTS				
P318E	1E	Ultraprox Reader 1 to AUX1	OFF	85
	2E	Ultraprox Reader 1 to AUX2	OFF	
	3E	Ultraprox Reader 1 to AUX3	OFF	
	4E	Ultraprox Reader 1 to AUX4	OFF	
	5E	Ultraprox Reader 1 to AUX5	OFF	
	6E	Ultraprox Reader 1 to AUX6	OFF	
	7E	Ultraprox Reader 1 to AUX7	OFF	
	8E	Ultraprox Reader 1 to AUX8	OFF	
P319E		Ultraprox Reader 1 output TIME	5 sec	
P328E	1E	Ultraprox Reader 2 to AUX1	OFF	
	2E	Ultraprox Reader 2 to AUX2	OFF	
	3E	Ultraprox Reader 2 to AUX3	OFF	
	4E	Ultraprox Reader 2 to AUX4	OFF	
	5E	Ultraprox Reader 2 to AUX5	OFF	
	6E	Ultraprox Reader 2 to AUX6	OFF	
	7E	Ultraprox Reader 2 to AUX7	OFF	
	8E	Ultraprox Reader 2 to AUX8	OFF	
P329E		Ultraprox Reader 2 output TIME	5 sec	
P338E	1E	Ultraprox Reader 3 to AUX1	OFF	
	2E	Ultraprox Reader 3 to AUX2	OFF	
	3E	Ultraprox Reader 3 to AUX3	OFF	
	4E	Ultraprox Reader 3 to AUX4	OFF	
	5E	Ultraprox Reader 3 to AUX5	OFF	
	6E	Ultraprox Reader 3 to AUX6	OFF	
	7E	Ultraprox Reader 3 to AUX7	OFF	
	8E	Ultraprox Reader 3 to AUX8	OFF	
P339E			5 sec	

u REAL TIME CLOCK options can be programmed in User Program Mode.

P340E	Real Time Clock set MINUTES	00 (00-59)	75
P341E	Real Time Clock set HOURS	00 (00-23)	
P342E	Real Time Clock set DAY	01 (01-31)	
P343E	Real Time Clock set MONTH	01 (01-12)	
P344E	Real Time Clock set YEAR	09 (00-63)	

OPTION		DESCRIPTION	Default
AutoTimer 1			
P350E		Minutes 0-59	
P351E		Hours 0-23	
P352E		Days (1=Sunday)	
P353E	1E	AREA 1 arm	
	2E	AREA 2 arm	
	3E	HOME arm	
	4E	Code Enable	
	5E	Code Disable	
	6E	KEYPAD Beeps	
	7E	RESET O/P Beeps	
	8E	Extend AutoTIME	
P354E	1E	AREA 1 disarm	
	2E	AREA 2 disarm	
	3E	HOME disarm	
	4E	Uses AUX5&6 not AUX1&2	
	5E	AUX1 TOGGLE	
	6E	AUX1 PULSE	
	7E	AUX2 TOGGLE	
	8E	AUX2 PULSE	

OPTION		DESCRIPTION	Default
AutoTimer 4			
P365E		Minutes 0-59	
P366E		Hours 0-23	
P367E		Days (1=Sunday)	
P368E	1E	AREA 1 arm	
P368E	2E	AREA 2 arm	
	3E	HOME arm	
	4E	Code Enable	
	5E	Code Disable	
	6E	KEYPAD Beeps	
	7E	RESET O/P Beeps	
	8E	Extend AutoTIME	
P369E	1E	AREA 1 disarm	
	2E	AREA 2 disarm	
	3E	HOME disarm	
	4E	Uses AUX5&6 not AUX1&2	
	5E	AUX1 TOGGLE	
	6E	AUX1 PULSE	
	7E	AUX2 TOGGLE	
	8E	AUX2 PULSE	

OPTION		DESCRIPTION	Default
AutoTimer 7			
P380E		Minutes 0-59	
P381E		Hours 0-23	
P382E		Days (1=Sunday)	
P383E	1E	AREA 1 arm	
	2E	AREA 2 arm	
	3E	BRIEF DAY MODE arm	
	4E	Code Enable	
	5E	Code Disable	
	6E	KEYPAD Beeps	
	7E	RESET O/P Beeps	
	8E	Extend AutoTIME	
P384E	1E	AREA 1 disarm	
	2E	AREA 2 disarm	
	3E	BRIEF DAY MODE disarm	
	4E	Uses AUX7&8 not AUX3&4	
	5E	AUX3 TOGGLE	
	6E	AUX3 PULSE	
	7E	AUX4 TOGGLE	
	8E	AUX4 PULSE	

AutoTimer 2			
P355E		Minutes 0-59	
P356E		Hours 0-23	
P357E		Days (1=Sunday)	
P358E	1E	AREA 1 arm	
	2E	AREA 2 arm	
	3E	HOME arm	
	4E	Code Enable	
	5E	Code Disable	
	6E	KEYPAD Beeps	
	7E	RESET O/P Beeps	
	8E	Extend AutoTIME	
P359E	1E	AREA 1 disarm	
	2E	AREA 2 disarm	
	3E	HOME disarm	
	4E	Uses AUX5&6 not AUX1&2	
	5E	AUX1 TOGGLE	
	6E	AUX1 PULSE	
	7E	AUX2 TOGGLE	
	8E	AUX2 PULSE	

AutoTimer 5			
P370E		Minutes 0-59	
P371E		Hours 0-23	
P372E		Days (1=Sunday)	
P373E	1E	AREA 1 arm	
	2E	AREA 2 arm	
	3E	HOME arm	
	4E	Code Enable	
	5E	Code Disable	
	6E	KEYPAD Beeps	
	7E	RESET O/P Beeps	
	8E	Extend AutoTIME	
P374E	1E	AREA 1 disarm	
	2E	AREA 2 disarm	
	3E	HOME disarm	
	4E	Uses AUX7&8 not AUX3&4	
	5E	AUX3 TOGGLE	
	6E	AUX3 PULSE	
	7E	AUX4 TOGGLE	
	8E	AUX4 PULSE	

AutoTimer 8			
P385E		Minutes 0-59	
P386E		Hours 0-23	
P387E		Days (1=Sunday)	
P388E	1E	AREA 1 arm	
	2E	AREA 2 arm	
	3E	BRIEF DAY MODE arm	
	4E	Code Enable	
	5E	Code Disable	
	6E	KEYPAD Beeps	
	7E	RESET O/P Beeps	
	8E	Extend AutoTIME	
P389E	1E	AREA 1 disarm	
	2E	AREA 2 disarm	
	3E	BRIEF DAY MODE disarm	
	4E	Uses AUX7&8 not AUX3&4	
	5E	AUX3 TOGGLE	
	6E	AUX3 PULSE	
	7E	AUX4 TOGGLE	
	8E	AUX4 PULSE	

AutoTimer 3			
P360E		Minutes 0-59	
P361E		Hours 0-23	
P362E		Days (1=Sunday)	
P363E	1E	AREA 1 arm	
	2E	AREA 2 arm	
	3E	HOME arm	
	4E	Code Enable	
	5E	Code Disable	
	6E	KEYPAD Beeps	
	7E	RESET O/P Beeps	
	8E	Extend AutoTIME	
P364E	1E	AREA 1 disarm	
	2E	AREA 2 disarm	
	3E	HOME disarm	
	4E	Uses AUX5&6 not AUX1&2	
	5E	AUX1 TOGGLE	
	6E	AUX1 PULSE	
	7E	AUX2 TOGGLE	
	8E	AUX2 PULSE	

AutoTimer 6			
P375E		Minutes 0-59	
P376E		Hours 0-23	
P377E		Days (1=Sunday)	
P378E	1E	AREA 1 arm	
	2E	AREA 2 arm	
	3E	HOME arm	
	4E	Code Enable	
	5E	Code Disable	
	6E	KEYPAD Beeps	
	7E	RESET O/P Beeps	
	8E	Extend AutoTIME	
P379E	1E	AREA 1 disarm	
	2E	AREA 2 disarm	
	3E	HOME disarm	
	4E	Uses AUX7&8 not AUX3&4	
	5E	AUX3 TOGGLE	
	6E	AUX3 PULSE	
	7E	AUX4 TOGGLE	
	8E	AUX4 PULSE	

AUTOTIMER RELATED OPTIONS

OPTION		DESCRIPTION	
P390E		AutoTime warning (1-99 min)	00
P392E	1E	AutoTime codes Option	OFF
P121E	3E	Enable AUX1 for AutoTimers	OFF
P122E	3E	Enable AUX2 for AutoTimers	OFF
P123E	3E	Enable AUX3 for AutoTimers	OFF
P124E	3E	Enable AUX4 for AutoTimers	OFF
P145E		AUX1 Pulse Time (1-99 sec)	20 sec
P146E		AUX2 Pulse Time (1-99 sec)	20 sec
P147E		AUX3 Pulse Time (1-99 sec)	20 sec
P148E		AUX4 Pulse Time (1-99 sec)	20 sec

See pages 74-76 for descriptions of AutoTimer related options.

CONTROL PANEL PACKING LIST

1 D8XCEL4G or D16XCEL4G Main board
1 Housing
1 Power supply (Australia only)
1 12V 7Ah battery (Australia only)
1 4G Antenna
1 User manual
1 Installer manual
9 or 17 End Of Line resistors 2.2k (D8/D16)
1 Lead assembly for battery
1 Lead assembly for internal tamper
2 Housing cover screws
4 Circuit board standoffs
1 Ness SIM, optional, (Australia only)

SPECIFICATIONS

POWER REQUIREMENTS		17VAC or 20VDC
QUIESCENT CURRENT DRAW		80mA with 1 keypad.
RECHARGEABLE BATTERY		12 volt 7.0 Amp/hour Sealed Lead Acid.
BATTERY CHARGING CURRENT		350mA maximum, current limited.
DYNAMIC BATTERY TEST		Backup battery is tested under load, hourly and on arming.
FUSES		2 Amp auto resetting / Siren output & Reset output. 500mA auto resetting / 12 volt auxiliary outputs. 200 mA auto resetting / strobe output.
4G MODULE		Multi-Band LTE-TDD/ LTE-FDD/HSPA+/GSM/GPRS/EDGE B1(2100)/B3(1800)/B7(2600)/B8(900)/B5(850)/B28(700 APAC)
SIM CARD TYPE		Standard SIM
ZONES		8 or 16 zone inputs. 2 x 24hr tamper inputs.
END OF LINE RESISTOR		Default 2200 Ohms (2.2k). Other values programmable.
MAXIMUM KEYPADS		Maximum 3x mixed keypads or 4x Navigator keypads per system
RECEIVER HEADER		Connection for the Ness Radio Interface.
AUX HEADER		Multi-pin connector provides outputs Aux1, Aux2, Aux3, Aux4, 12V DC and connection for output expander/s.
SERIAL HEADER		Serial data port for optional ethernet module or direct connect programming using NessComms™ software.
READER HEADER		Multi-pin port for connecting up to 3 Ness proximity access card readers.
SIREN		On board siren driver with timed output. Maximum 3 x 8 Ohm horn speakers.
STROBE		12V DC timed output. Maximum 2 x 1 Watt strobe lights.
RESET		12V DC timed output. Maximum 3 x 12V piezo screamers.
EQUIPMENT POWER OUTPUT		13.8V DC output for powering detectors and other equipment. Maximum 500mA.
DIMENSIONS	PLASTIC HOUSING	235w x 300h x 90d mm
	CARTON	330w x 310h x 105d mm
CARTON WEIGHT (Plastic Housing)		~ 4kg including plug pack and battery

MADE IN AUSTRALIA

RELEASE NOTES

XCEL 4G Installation Manual

Rev 1.14D Sep 2024
• P60E 7E Disable Keypad display, LCD keypads now turn off display and keys backlighting.

Rev 1.14C Aug 2024
• p78, To send a learn signal from a restoring device: Move the magnet **towards** the reed switch.
online filename remains Rev1.14

Rev 1.14B Apr 2024
• p8, Fixed battery leads showing incorrect Red+/Red+
online filename remains Rev1.14

Rev 1.14 Feb 2024
• p5, Added Ness-Bridge and Mezzo app overview
• p9, Added Ness-Bridge & X-TWR receiver info
• p33, p95,changed Monitor Mode to Home Mode

Rev 1.13 Mar 2023
• p18, p58, Central station receiver setting: UDP, Unencrypted.
• p17, p23, Emphasis on "User Codes must not start with Zero"

Rev 1.12 Feb 2022
• p22 Fixed typo Installer Email 1 = IE1

Rev 1.11 May 2021
• p14 updated descriptions of SMS responses

Rev 1.1 March 2021
• p5 improved description of XCEL App

Rev 1.0 March 2021
Firmware Rev11.1
All XCEL 3G program options are valid with the following changes for XCEL 4G

p52, New option P86E 3E: Enable Reporting by ARMOR IP
p51, New option P85E Polling Interval
p47, Changed options P170E, P171E, Central Station Reporting Numbers can be programmed as:
• Base Station Phone Number for Contact ID reporting > programmed via Keypad or SMS
• IP Address for ARMOR IP reporting > programmed via Keypad or SMS
• Domain Name for ARMOR IP reporting > programmed via SMS

XCEL REVISIONS OVERVIEW

FIRMWARE	Production Date	How many SMS Phone numbers?	Cellular Generation	Monitoring Protocols	Locked to Ness SIM?
Rev10.0 to Rev10.3	Oct 2018	10	3G	SMS Self Monitoring Contact ID Back To Base	No
Rev10.4	Jul 2019	4 (3 alarm, 1 open/close)	3G		Yes
Rev10.6	Oct 2019	4 (3 alarm, 1 open/close)	3G		Locked and unlocked versions available
Rev11 and later	March 2021	5 (3 alarm, 2 open/close)	4G/3G	SMS Self Monitoring Contact ID Back-To-Base ARMOR IP Back-To-Base	No

HOW TO DISPLAY THE FIRMWARE VERSION
By Keypad, in User or Installer program mode, press P 99999999 E (eight 9's)
By SMS, send the command: i [Master Code] E MOD

INSTALLATION RECORD

D8 DIALLER SECURITY ALARM PANEL

D16 DIALLER SECURITY ALARM PANEL

☐ NESS D8 ALARM CONTROL PANEL

☐ NESS D16 ALARM CONTROL PANEL

DATE PURCHASED:	DATE INSTALLED:
INSTALLATION COMPANY:	
TELEPHONE:	
MONITORING COMPANY:	
TELEPHONE:	

P26E ENTRY DELAY TIME 1		Seconds
P27E ENTRY DELAY TIME 2		Seconds
P28E EXIT DELAY TIME		Seconds
P29E SIREN RESET TIME		Minutes

ZONE ASSIGNMENT

ZONES		DEVICE TYPE PIR, Reed switch, etc	DESCRIPTION Entrance, bedroom1, etc	**P41E** ENTRY DELAY 1	**P43E** ENTRY DELAY 2	**P42E** HANDOVER	**P40E** INSTANT	**P45E** AREA 1	**P46E** AREA 2	**P51E** HOME MODE	**P52E** 24 HOUR	**P54E** RESET OUTPUT	**P55E** STROBE OUTPUT	**P56E** SONALERT OUTPUT	**P57E** SIREN OUTPUT	**P74E** Report (dialler)
D8 & D16	1															
	2															
	3															
	4															
	5															
	6															
	7															
	8															
D16	9															
	10															
	11															
	12															
	13															
	14															
	15															
	16															

USER CODE	OPTION No	Extra Options Assigned E.g. Radio Code, Arm Only, etc.
1 Master Code	P201E	
2	P202E	
3	P203E	
4	P204E	
5	P205E	
6	P206E	
7	P207E	
8	P208E	
9	P209E	
10	P210E	
11	P211E	
12	P212E	
13	P213E	
14	P214E	
15	P215E	
16	P216E	
17	P217E	
18	P218E	
19	P219E	

USER CODE	OPTION No	Extra Options Assigned E.g. Radio Code, Arm Only, etc.
20	P220E	
21	P221E	
22	P222E	
23	P223E	
24	P224E	
25	P225E	
26	P226E	
27	P227E	
28	P228E	
29	P229E	
30	P230E	
31	P231E	
32	P232E	
33	P233E	
34	P234E	
35	P235E	
36	P236E	
37	P237E	
38	P238E	

USER CODE	OPTION No	Extra Options Assigned E.g. Radio Code, Arm Only, etc.
39	P239E	
40	P240E	
41	P241E	
42	P242E	
43	P243E	
44	P244E	
45	P245E	
46	P246E	
47	P247E	
48	P248E	
49	P249E	
50	P250E	
51	P251E	
52	P252E	
53	P253E	
54	P254E	
55	P255E	
56	P256E	

© 2004 Ness Security Products

NESS CORPORATION